LM2672 SIMPLE SWITCHER® Power Converter High Efficiency 1A Step-Down Voltage Regulator with Features

Check for Samples: LM2672

FEATURES

- **Efficiency up to 96%**
- **Available in SOIC-8 and 8-pin PDIP Packages**
- **Computer Design Software *LM267X Made Simple* Version 6.0**
- **Simple and Easy to Design with**
- **Requires only 5 External Components**
- **Uses Readily Available Standard Inductors**
- **3.3V, 5.0V, 12V, and Adjustable Output Versions**
- **Adjustable Version Output Voltage Range: 1.21V to 37V**
- **±1.5% Max Output Voltage Tolerance Over Line and Load Conditions**
- **Specified 1A Output Load Current**
- **0.25Ω DMOS Output Switch**
- **Wide Input Voltage Range: 8V to 40V**
- **260 kHz Fixed Frequency Internal Oscillator**
- **TTL Shutdown Capability, Low Power Standby Mode**
- **Soft-Start and Frequency Synchronization**
- **Thermal Shutdown and Current Limit Protection**

TYPICAL APPLICATIONS

- **Simple High Efficiency (>90%) Step-Down (Buck) Regulator**
- **Efficient Pre-Regulator for Linear Regulators**

DESCRIPTION

The LM2672 series of regulators are monolithic integrated circuits built with a LMDMOS process. These regulators provide all the active functions for a step-down (buck) switching regulator, capable of driving a 1A load current with excellent line and load regulation. These devices are available in fixed output voltages of 3.3V, 5.0V, 12V, and an adjustable output version.

Requiring a minimum number of external components, these regulators are simple to use and include patented internal frequency compensation (Patent Nos. 5,382,918 and 5,514,947), fixed frequency oscillator, external shutdown, soft-start, and frequency synchronization.

The LM2672 series operates at a switching frequency of 260 kHz, thus allowing smaller sized filter components than what would be needed with lower frequency switching regulators. Because of its very high efficiency (>90%), the copper traces on the printed circuit board are the only heat sinking needed.

A family of standard inductors for use with the LM2672 are available from several different manufacturers. This feature greatly simplifies the design of switch-mode power supplies using these advanced ICs. Also included in the datasheet are selector guides for diodes and capacitors designed to work in switch-mode power supplies.

Other features include a ensured ±1.5% tolerance on output voltage within specified input voltages and output load conditions, and ±10% on the oscillator frequency. External shutdown is included, featuring typically 50 μA stand-by current. The output switch includes current limiting, as well as thermal shutdown for full protection under fault conditions.

To simplify the LM2672 buck regulator design procedure, there exists computer design software, ***LM267X Made Simple*** version 6.0.

Please be aware that an important notice concerning availability, standard warranty, and use in critical applications of Texas Instruments semiconductor products and disclaimers thereto appears at the end of this data sheet.

SIMPLE SWITCHER, WEBENCH are registered trademarks of Texas Instruments.
Windows is a registered trademark of Microsoft Corporation.
All other trademarks are the property of their respective owners.

PRODUCTION DATA information is current as of publication date. Products conform to specifications per the terms of the Texas Instruments standard warranty. Production processing does not necessarily include testing of all parameters.

Copyright © 1998–2013, Texas Instruments Incorporated

Typical Application

(Fixed Output Voltage Versions)

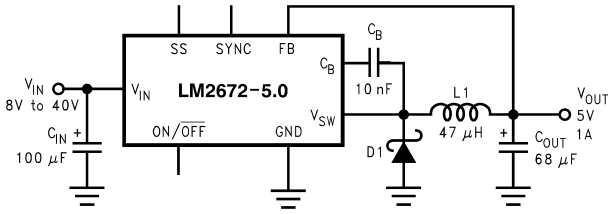

Connection Diagram

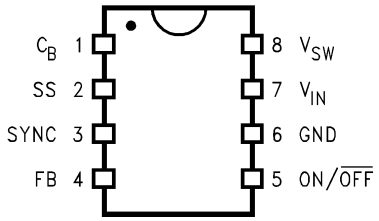

Figure 1. 8-Lead Package
SOIC-8/PDIP Package
See Package Drawing Numbers D (R-PDSO-G8)/P (R-PDIP-T8)
Top View

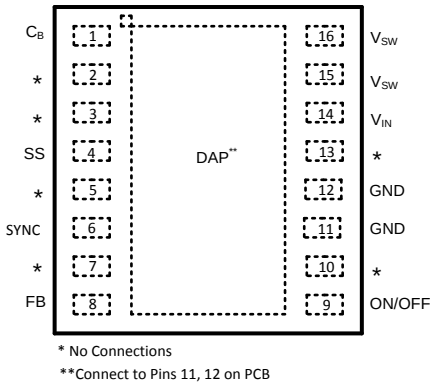

Figure 2. 16-Lead WSON Surface Mount Package
See Package Drawing Number NHN0016A
Top View

These devices have limited built-in ESD protection. The leads should be shorted together or the device placed in conductive foam during storage or handling to prevent electrostatic damage to the MOS gates.

Copyright © 1998–2013, Texas Instruments Incorporated

Absolute Maximum Ratings[1][2]

Supply Voltage		45V
ON/$\overline{\text{OFF}}$ Pin Voltage		−0.1V ≤ V_{SH} ≤ 6V
Switch Voltage to Ground		−1V
Boost Pin Voltage		V_{SW} + 8V
Feedback Pin Voltage		−0.3V ≤ V_{FB} ≤ 14V
ESD Susceptibility	Human Body Model[3]	2 kV
Power Dissipation		Internally Limited
Storage Temperature Range		−65°C to +150°C
Lead Temperature		
D Package	Vapor Phase (60s)	+215°C
	Infrared (15s)	+220°C
PDIP Package (Soldering, 10s)		+260°C
Maximum Junction Temperature		+150°C

(1) Absolute Maximum Ratings indicate limits beyond which damage to the device may occur. Operating Ratings indicate conditions for which the device is intended to be functional, but device parameter specifications may not be ensured under these conditions. For specific specifications and test conditions, see the Electrical Characteristics.
(2) If Military/Aerospace specified devices are required, please contact the Texas Instruments Sales Office/ Distributors for availability and specifications.
(3) The human body model is a 100 pF capacitor discharged through a 1.5 kΩ resistor into each pin.

Operating Ratings

Supply Voltage	6.5V to 40V
Temperature Range	−40°C ≤ T_J ≤ +125°C

LM2672-3.3 Electrical Characteristics

Specifications with standard type face are for T_J = 25°C, and those in **bold type face** apply over **full Operating Temperature Range.**

Symbol	Parameter	Conditions	Typ[1]	Min[2]	Max[2]	Units
SYSTEM PARAMETERS Test Circuit Figure 22[3]						
V_{OUT}	Output Voltage	V_{IN} = 8V to 40V, I_{LOAD} = 20 mA to 1A	3.3	3.251/**3.201**	3.350/**3.399**	V
V_{OUT}	Output Voltage	V_{IN} = 6.5V to 40V, I_{LOAD} = 20 mA to 500 mA	3.3	3.251/**3.201**	3.350/**3.399**	V
η	Efficiency	V_{IN} = 12V, I_{LOAD} = 1A	86			%

(1) Typical numbers are at 25°C and represent the most likely norm.
(2) All limits specified at room temperature (standard type face) and at **temperature extremes (bold type face)**. All room temperature limits are 100% production tested. All limits at **temperature extremes** are specified via correlation using standard Statistical Quality Control (SQC) methods. All limits are used to calculate Average Outgoing Quality Level (AOQL).
(3) External components such as the catch diode, inductor, input and output capacitors, and voltage programming resistors can affect switching regulator performance. When the LM2672 is used as shown in Figure 22 and Figure 23 test circuits, system performance will be as specified by the system parameters section of the Electrical Characteristics.

LM2672-5.0 Electrical Characteristics

Symbol	Parameter	Conditions	Typ[1]	Min[2]	Max[2]	Units
SYSTEM PARAMETERS Test Circuit Figure 22[3]						
V_{OUT}	Output Voltage	V_{IN} = 8V to 40V, I_{LOAD} = 20 mA to 1A	5.0	4.925/**4.850**	5.075/**5.150**	V
V_{OUT}	Output Voltage	V_{IN} = 6.5V to 40V, I_{LOAD} = 20 mA to 500 mA	5.0	4.925/**4.850**	5.075/**5.150**	V
η	Efficiency	V_{IN} = 12V, I_{LOAD} = 1A	90			%

(1) Typical numbers are at 25°C and represent the most likely norm.
(2) All limits specified at room temperature (standard type face) and at **temperature extremes (bold type face)**. All room temperature limits are 100% production tested. All limits at **temperature extremes** are specified via correlation using standard Statistical Quality Control (SQC) methods. All limits are used to calculate Average Outgoing Quality Level (AOQL).
(3) External components such as the catch diode, inductor, input and output capacitors, and voltage programming resistors can affect switching regulator performance. When the LM2672 is used as shown in Figure 22 and Figure 23 test circuits, system performance will be as specified by the system parameters section of the Electrical Characteristics.

Copyright © 1998–2013, Texas Instruments Incorporated

LM2672-12 Electrical Characteristics

Symbol	Parameter	Conditions	Typ (1)	Min (2)	Max (2)	Units
SYSTEM PARAMETERS Test Circuit Figure 22 (3)						
V_{OUT}	Output Voltage	V_{IN} = 15V to 40V, I_{LOAD} = 20 mA to 1A	12	11.82/**11.64**	12.18/**12.36**	V
η	Efficiency	V_{IN} = 24V, I_{LOAD} = 1A	94			%

(1) Typical numbers are at 25°C and represent the most likely norm.
(2) All limits specified at room temperature (standard type face) and at **temperature extremes (bold type face)**. All room temperature limits are 100% production tested. All limits at **temperature extremes** are specified via correlation using standard Statistical Quality Control (SQC) methods. All limits are used to calculate Average Outgoing Quality Level (AOQL).
(3) External components such as the catch diode, inductor, input and output capacitors, and voltage programming resistors can affect switching regulator performance. When the LM2672 is used as shown in Figure 22 and Figure 23 test circuits, system performance will be as specified by the system parameters section of the Electrical Characteristics.

LM2672-ADJ Electrical Characteristics

Symbol	Parameter	Conditions	Typ (1)	Min (2)	Max (2)	Units
SYSTEM PARAMETERS Test Circuit Figure 23 (3)						
V_{FB}	Feedback Voltage	V_{IN} = 8V to 40V, I_{LOAD} = 20 mA to 1A	1.210	1.192/**1.174**	1.228/**1.246**	V
		V_{OUT} Programmed for 5V				
		(see Circuit of Figure 23)				
V_{FB}	Feedback Voltage	V_{IN} = 6.5V to 40V, I_{LOAD} = 20 mA to 500 mA	1.210	1.192/**1.174**	1.228/**1.246**	V
		V_{OUT} Programmed for 5V				
		(see Circuit of Figure 23)				
η	Efficiency	V_{IN} = 12V, I_{LOAD} = 1A	90			%

(1) Typical numbers are at 25°C and represent the most likely norm.
(2) All limits specified at room temperature (standard type face) and at **temperature extremes (bold type face)**. All room temperature limits are 100% production tested. All limits at **temperature extremes** are specified via correlation using standard Statistical Quality Control (SQC) methods. All limits are used to calculate Average Outgoing Quality Level (AOQL).
(3) External components such as the catch diode, inductor, input and output capacitors, and voltage programming resistors can affect switching regulator performance. When the LM2672 is used as shown in Figure 22 and Figure 23 test circuits, system performance will be as specified by the system parameters section of the Electrical Characteristics.

All Output Voltage Versions

Specifications with standard type face are for T_J = 25°C, and those in **bold type face** apply over **full Operating Temperature Range**. Unless otherwise specified, V_{IN} = 12V for the 3.3V, 5V, and Adjustable versions and V_{IN} = 24V for the 12V version, and I_{LOAD} = 100 mA.

Symbol	Parameters	Conditions	Typ	Min	Max	Units
DEVICE PARAMETERS						
I_Q	Quiescent Current	$V_{FEEDBACK}$ = 8V	2.5		3.6	mA
		For 3.3V, 5.0V, and ADJ Versions				
		$V_{FEEDBACK}$ = 15V	2.5			mA
		For 12V Versions				
I_{STBY}	Standby Quiescent Current	ON/$\overline{OFF}$ Pin = 0V	50		100/**150**	μA
I_{CL}	Current Limit		1.55	1.25/**1.2**	2.1/**2.2**	A
I_L	Output Leakage Current	V_{IN} = 40V, ON/$\overline{OFF}$ Pin = 0V	1		25	μA
		V_{SWITCH} = 0V				
		V_{SWITCH} = −1V, ON/$\overline{OFF}$ Pin = 0V	6		15	mA
$R_{DS(ON)}$	Switch On-Resistance	I_{SWITCH} = 1A	0.25		0.30/**0.50**	Ω
f_O	Oscillator Frequency	Measured at Switch Pin	260	**225**	**275**	kHz
D	Maximum Duty Cycle		95			%
	Minimum Duty Cycle		0			%
I_{BIAS}	Feedback Bias	$V_{FEEDBACK}$ = 1.3V	85			nA
	Current	ADJ Version Only				

Copyright © 1998–2013, Texas Instruments Incorporated

All Output Voltage Versions (continued)

Specifications with standard type face are for T_J = 25°C, and those in **bold type face** apply over **full Operating Temperature Range**. Unless otherwise specified, V_{IN} = 12V for the 3.3V, 5V, and Adjustable versions and V_{IN} = 24V for the 12V version, and I_{LOAD} = 100 mA.

Symbol	Parameters	Conditions	Typ	Min	Max	Units
$V_{S/D}$	ON/$\overline{OFF}$ Pin		1.4	**0.8**	**2.0**	V
	Voltage Thesholds					
$I_{S/D}$	ON/$\overline{OFF}$ Pin Current	ON/$\overline{OFF}$ Pin = 0V	20	**7**	**37**	µA
F_{SYNC}	Synchronization Frequency	V_{SYNC} = 3.5V, 50% duty cycle	400			kHz
V_{SYNC}	Synchronization Threshold Voltage		1.4			V
V_{SS}	Soft-Start Voltage		0.63	**0.53**	**0.73**	V
I_{SS}	Soft-Start Current		4.5	**1.5**	**6.9**	µA
θ_{JA}	Thermal Resistance	PDIP Package, Junction to Ambient(1)	95			°C/W
		D Package, Junction to Ambient(1)	105			

(1) Junction to ambient thermal resistance with approximately 1 square inch of printed circuit board copper surrounding the leads. Additional copper area will lower thermal resistance further. See Application Information section in the application note accompanying this datasheet and the thermal model in ***LM267X Made Simple*** version 6.0 software. The value θ_{J-A} for the WSON (NHN) package is specifically dependent on PCB trace area, trace material, and the number of layers and thermal vias. For improved thermal resistance and power dissipation for the WSON package, refer to Application Note AN-1187.

Copyright © 1998–2013, Texas Instruments Incorporated

Typical Performance Characteristics

Normalized Output Voltage

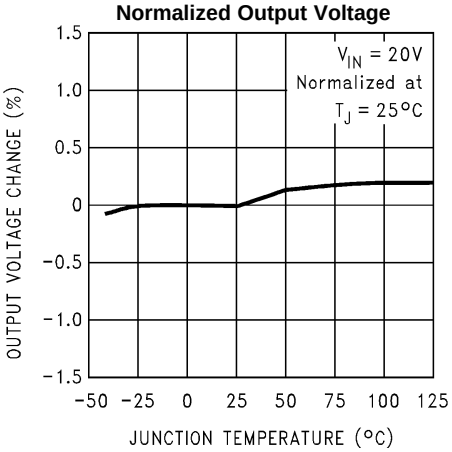

Figure 3.

Line Regulation

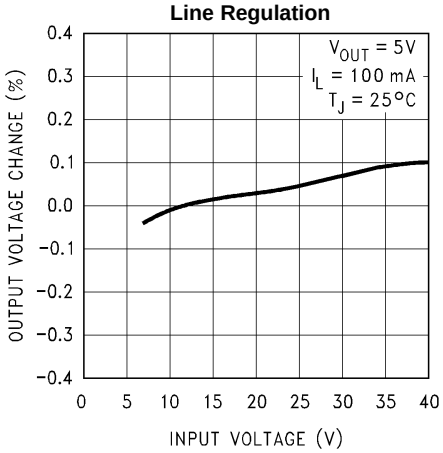

Figure 4.

Efficiency

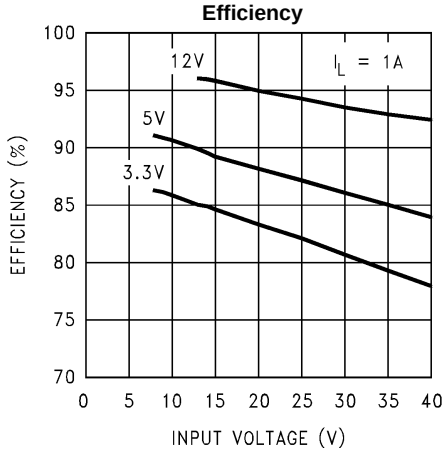

Figure 5.

Drain-to-Source Resistance

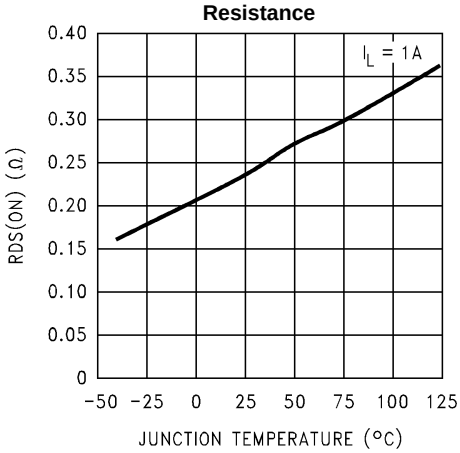

Figure 6.

Switch Current Limit

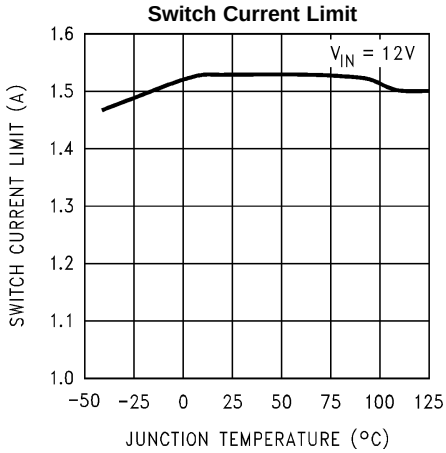

Figure 7.

Operating Quiescent Current

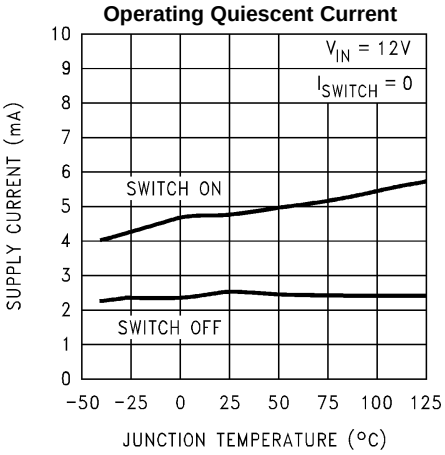

Figure 8.

Copyright © 1998–2013, Texas Instruments Incorporated

Typical Performance Characteristics (continued)

Standby Quiescent Current

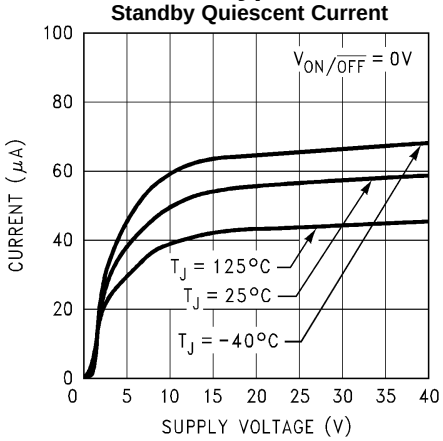

Figure 9.

ON/$\overline{OFF}$ Threshold Voltage

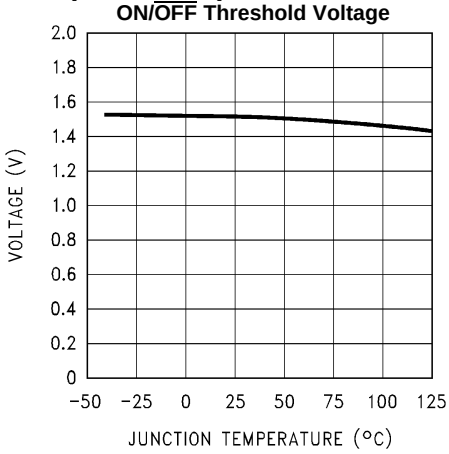

Figure 10.

ON/$\overline{OFF}$ Pin Current (Sourcing)

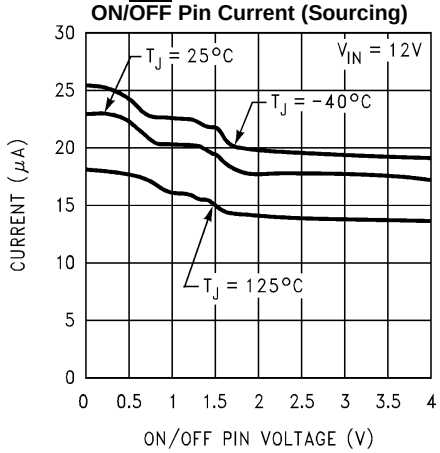

Figure 11.

Switching Frequency

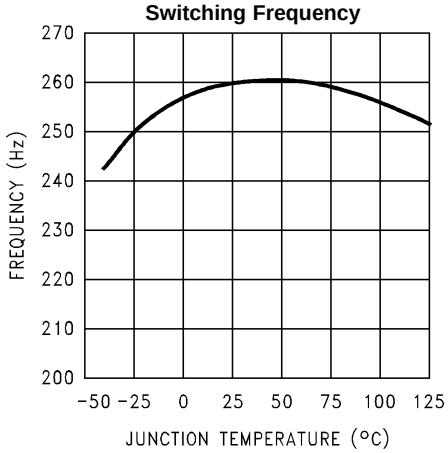

Figure 12.

Feedback Pin Bias Current

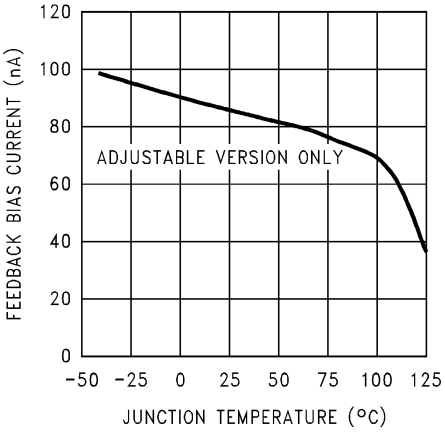

Figure 13.

Peak Switch Current

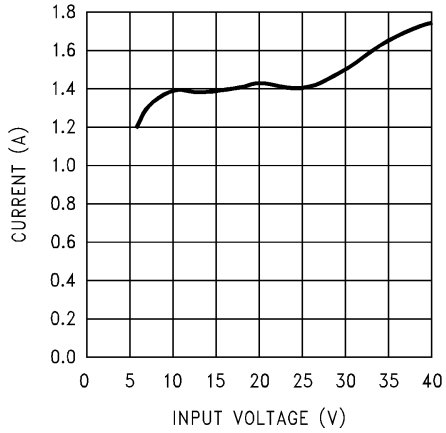

Figure 14.

Typical Performance Characteristics (continued)

Dropout Voltage—3.3V Option

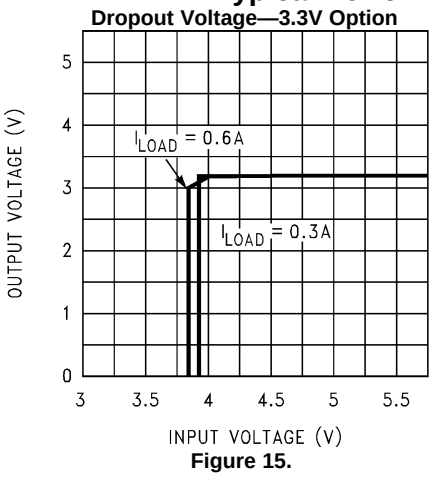

Figure 15.

Dropout Voltage—5.0V Option

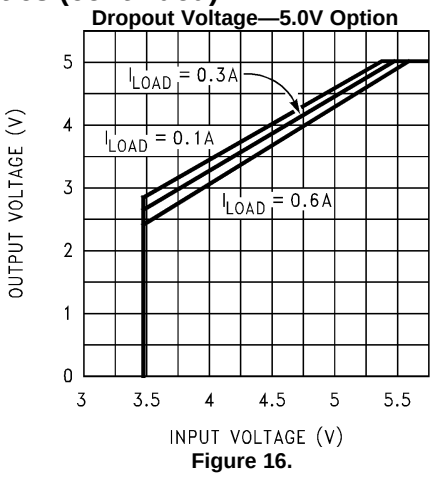

Figure 16.

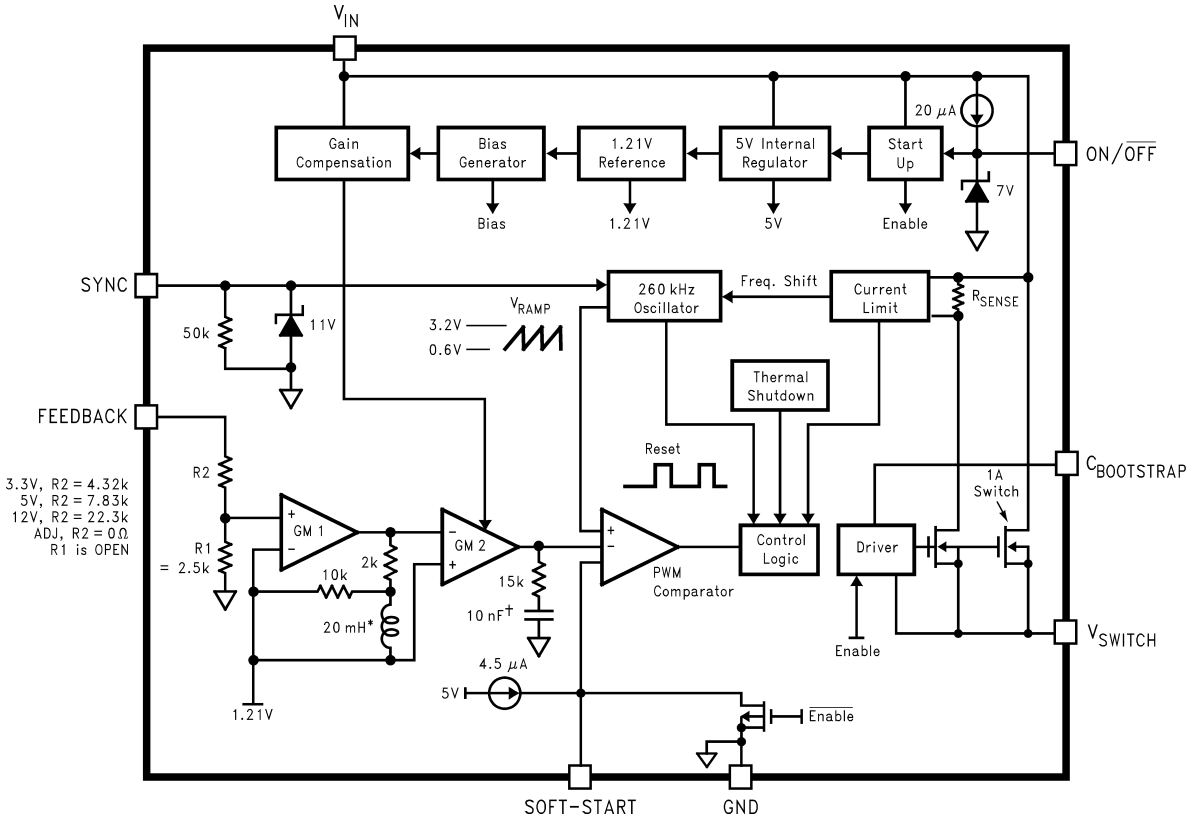

* Patent Number 5,514,947
† Patent Number 5,382,918

Figure 17. Block Diagram

Copyright © 1998–2013, Texas Instruments Incorporated

Typical Performance Characteristics

(Circuit of Figure 22)

Continuous Mode Switching Waveforms
V_{IN} = 20V, V_{OUT} = 5V, I_{LOAD} = 1A
L = 47 µH, C_{OUT} = 68 µF, C_{OUT}ESR = 50 mΩ

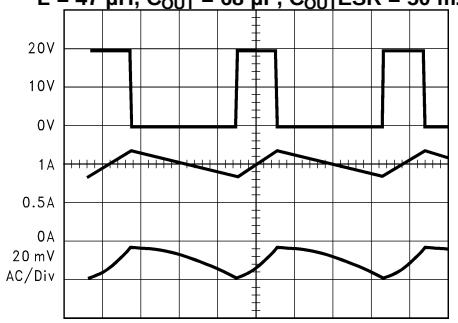

A: V_{SW} Pin Voltage, 10 V/div.
B: Inductor Current, 0.5 A/div
C: Output Ripple Voltage, 20 mV/div AC-Coupled

Figure 18. Horizontal Time Base: 1 µs/div

Discontinuous Mode Switching Waveforms
V_{IN} = 20V, V_{OUT} = 5V, I_{LOAD} = 300 mA
L = 15 µH, C_{OUT} = 68 µF (2×), C_{OUT}ESR = 25 mΩ

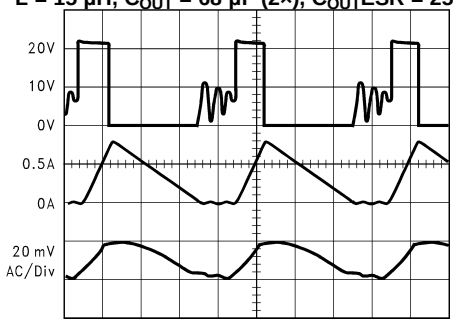

A: V_{SW} Pin Voltage, 10 V/div.
B: Inductor Current, 0.5 A/div
C: Output Ripple Voltage, 20 mV/div AC-Coupled

Figure 19. Horizontal Time Base: 1 µs/div

Load Transient Response for Continuous Mode
V_{IN} = 20V, V_{OUT} = 5V, I_{LOAD} = 1A
L = 47 µH, C_{OUT} = 68 µF, C_{OUT}ESR = 50 mΩ

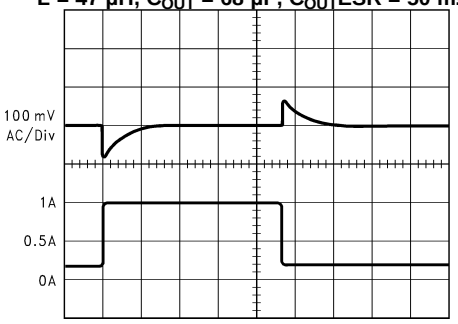

A: Output Voltage, 100 mV/div, AC-Coupled
B: Load Current: 200 mA to 1A Load Pulse

Figure 20. Horizontal Time Base: 50 µs/div

Load Transient Response for Discontinuous Mode
V_{IN} = 20V, V_{OUT} = 5V,
L = 47 µH, C_{OUT} = 68 µF, C_{OUT}ESR = 50 mΩ

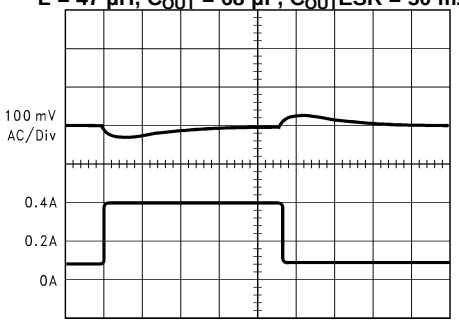

A: Output Voltage, 100 mV/div, AC-Coupled
B: Load Current: 100 mA to 300 mA Load Pulse

Figure 21. Horizontal Time Base: 200 µs/div

Copyright © 1998–2013, Texas Instruments Incorporated

TEST CIRCUIT AND LAYOUT GUIDELINES

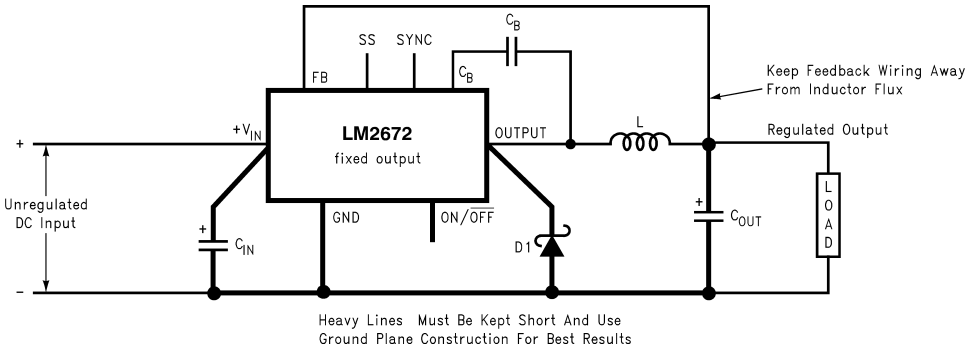

C_{IN} - 22 µF, 50V Tantalum, Sprague "199D Series"
C_{OUT} - 47 µF, 25V Tantalum, Sprague "595D Series"
D1 - 3.3A, 50V Schottky Rectifier, IR 30WQ05F
L1 - 68 µH Sumida #RCR110D-680L
C_B - 0.01 µF, 50V Ceramic

Figure 22. Standard Test Circuits and Layout Guides Fixed Output Voltage Versions

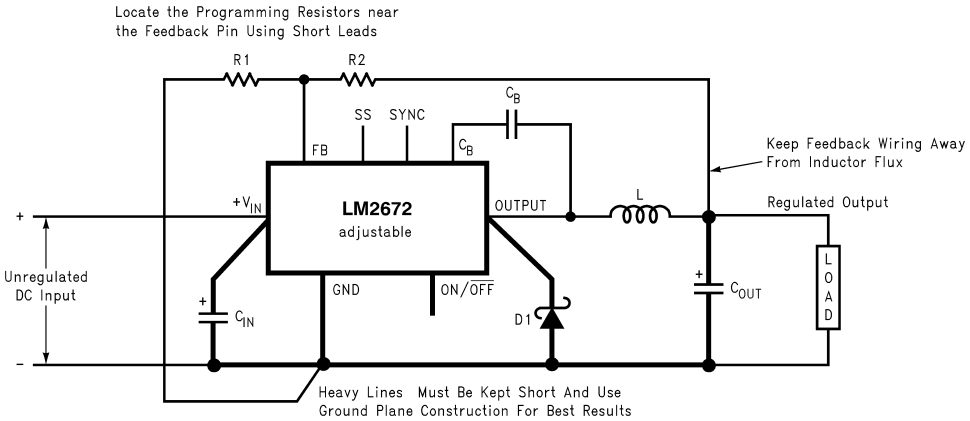

C_{IN} - 22 µF, 50V Tantalum, Sprague "199D Series"
C_{OUT} - 47 µF, 25V Tantalum, Sprague "595D Series"
D1 - 3.3A, 50V Schottky Rectifier, IR 30WQ05F
L1 - 68 µH Sumida #RCR110D-680L
R1 - 1.5 kΩ, 1%
C_B - 0.01 µF, 50V Ceramic
For a 5V output, select R2 to be 4.75 kΩ, 1%

$$V_{OUT} = V_{REF}\left(1 + \frac{R_2}{R_1}\right)$$

where V_{REF} = 1.21V

$$R_2 = R_1\left(\frac{V_{OUT}}{V_{REF}} - 1\right)$$

Use a 1% resistor for best stability.

Figure 23. Standard Test Circuits and Layout Guides Adjustable Output Voltage Versions

Copyright © 1998–2013, Texas Instruments Incorporated

Applications Hints

The LM2672 provides all of the active functions required for a step-down (buck) switching regulator. The internal power switch is a DMOS power MOSFET to provide power supply designs with high current capability, up to 1A, and highly efficient operation.

The LM2672 is part of the SIMPLE SWITCHER family of power converters. A complete design uses a minimum number of external components, which have been pre-determined from a variety of manufacturers. Using either this data sheet or TI's WEBENCH® design tool, a complete switching power supply can be designed quickly. Also, refer to the LM2670 data sheet for additional applications information.

SWITCH OUTPUT

This is the output of a power MOSFET switch connected directly to the input voltage. The switch provides energy to an inductor, an output capacitor and the load circuitry under control of an internal pulse-width-modulator (PWM). The PWM controller is internally clocked by a fixed 260kHz oscillator. In a standard step-down application the duty cycle (Time ON/Time OFF) of the power switch is proportional to the ratio of the power supply output voltage to the input voltage. The voltage on the V_{SW} pin cycles between V_{in} (switch ON) and below ground by the voltage drop of the external Schottky diode (switch OFF).

INPUT

The input voltage for the power supply is connected to the V_{IN} pin. In addition to providing energy to the load the input voltage also provides bias for the internal circuitry of the LM2672. For ensured performance the input voltage must be in the range of 6.5V to 40V. For best performance of the power supply the V_{IN} pin should always be bypassed with an input capacitor located close to this pin and GND.

C BOOST

A capacitor must be connected from the C_B pin to the V_{SW} pin. This capacitor boosts the gate drive to the internal MOSFET above V_{in} to fully turn it ON. This minimizes conduction losses in the power switch to maintain high efficiency. The recommended value for C Boost is 0.01µF.

GROUND

This is the ground reference connection for all components in the power supply. In fast-switching, high-current applications such as those implemented with the LM2672, it is recommended that a broad ground plane be used to minimize signal coupling throughout the circuit

SYNC

This input allows control of the switching clock frequency. If left open-circuited the regulator will be switched at the internal oscillator frequency, typically 260 kHz. An external clock can be used to force the switching frequency and thereby control the output ripple frequency of the regulator. This capability provides for consistent filtering of the output ripple from system to system as well as precise frequency spectrum positioning of the ripple frequency which is often desired in communications and radio applications. This external frequency must be greater than the LM2672 internal oscillator frequency, which could be as high as 275 kHz, to prevent an erroneous reset of the internal ramp oscillator and PWM control of the power switch. The ramp oscillator is reset on the positive going edge of the sync input signal. It is recommended that the external TTL or CMOS compatible clock (between 0V and a level greater than 3V) be ac coupled to the SYNC pin through a 100pF capacitor and a 1KΩ resistor to ground.

When the SYNC function is used, current limit frequency foldback is not active. Therefore, the device may not be fully protected against extreme output short circuit conditions.

FEEDBACK

This is the input to a two-stage high gain amplifier, which drives the PWM controller. Connect the FB pin directly to the output for proper regulation. For the fixed output devices (3.3V, 5V and 12V outputs), a direct wire connection to the output is all that is required as internal gain setting resistors are provided inside the LM2672. For the adjustable output version two external resistors are required to set the dc output voltage. For stable operation of the power supply it is important to prevent coupling of any inductor flux to the feedback input.

Copyright © 1998–2013, Texas Instruments Incorporated

ON/OFF

This input provides an electrical ON/OFF control of the power supply. Connecting this pin to ground or to any voltage less than 0.8V will completely turn OFF the regulator. The current drain from the input supply when OFF is only 50µA. The ON/OFF input has an internal pull-up current source of approximately 20µA and a protection clamp zener diode of 7V to ground. When electrically driving the ON/OFF pin the high voltage level for the ON condition should not exceed the 6V absolute maximum limit. When ON/OFF control is not required this pin should be left open.

DAP (WSON PACKAGE)

The Die Attach Pad (DAP) can and should be connected to the PCB Ground plane/island. For CAD and assembly guidelines refer to Application Note SNAO401 at http://www.ti.com/lit/an/snoa401/snoa401.pdf.

LM2672 Series Buck Regulator Design Procedure (Fixed Output)

PROCEDURE (Fixed Output Voltage Version)	EXAMPLE (Fixed Output Voltage Version)
To simplify the buck regulator design procedure, Texas Instruments is making available computer design software to be used with the SIMPLE SWITCHER *line of switching regulators.**LM267X Made Simple*** version 6.0 is available on Windows® *3.1, NT, or 95 operating systems.*	
Given:	**Given:**
V_{OUT} = Regulated Output Voltage (3.3V, 5V, or 12V)	V_{OUT} = 5V
V_{IN}(max) = Maximum DC Input Voltage	V_{IN}(max) = 12V
I_{LOAD}(max) = Maximum Load Current	I_{LOAD}(max) = 1A
1. Inductor Selection (L1) **A.** Select the correct inductor value selection guide from Figure 24 and Figure 25 or Figure 26 (output voltages of 3.3V, 5V, or 12V respectively). For all other voltages, see the design procedure for the adjustable version.	**1. Inductor Selection (L1)** **A.** Use the inductor selection guide for the 5V version shown in Figure 25.
B. From the inductor value selection guide, identify the inductance region intersected by the Maximum Input Voltage line and the Maximum Load Current line. Each region is identified by an inductance value and an inductor code (LXX).	**B.** From the inductor value selection guide shown in Figure 25, the inductance region intersected by the 12V horizontal line and the 1A vertical line is 33 µH, and the inductor code is L23.
C. Select an appropriate inductor from the four manufacturer's part numbers listed in Table 1. Each manufacturer makes a different style of inductor to allow flexibility in meeting various design requirements. Listed below are some of the differentiating characteristics of each manufacturer's inductors:	**C.** The inductance value required is 33 µH. From the table in Table 1, go to the L23 line and choose an inductor part number from any of the four manufacturers shown. (In most instances, both through hole and surface mount inductors are available.)
Schott: ferrite EP core inductors; these have very low leakage magnetic fields to reduce electro-magnetic interference (EMI) and are the lowest power loss inductors	
Renco: ferrite stick core inductors; benefits are typically lowest cost inductors and can withstand E•T and transient peak currents above rated value. Be aware that these inductors have an external magnetic field which may generate more EMI than other types of inductors.	
Pulse: powered iron toroid core inductors; these can also be low cost and can withstand larger than normal E•T and transient peak currents. Toroid inductors have low EMI.	
Coilcraft: ferrite drum core inductors; these are the smallest physical size inductors, available only as SMT components. Be aware that these inductors also generate EMI—but less than stick inductors.	
Complete specifications for these inductors are available from the respective manufacturers. A table listing the manufacturers' phone numbers is located in Table 2.	

Copyright © 1998–2013, Texas Instruments Incorporated

PROCEDURE (Fixed Output Voltage Version)	EXAMPLE (Fixed Output Voltage Version)
2. Output Capacitor Selection (C_{OUT}) **A.** Select an output capacitor from the output capacitor table in Table 3. Using the output voltage and the inductance value found in the inductor selection guide, step 1, locate the appropriate capacitor value and voltage rating.	**2. Output Capacitor Selection (C_{OUT})** **A.** Use the 5.0V section in the output capacitor table in Table 3. Choose a capacitor value and voltage rating from the line that contains the inductance value of 33 µH. The capacitance and voltage rating values corresponding to the 33 µH
The capacitor list contains through-hole electrolytic capacitors from four different capacitor manufacturers and surface mount tantalum capacitors from two different capacitor manufacturers. It is recommended that both the manufacturers and the manufacturer's series that are listed in the table be used. A table listing the manufacturers' phone numbers is located in Table 4.	Surface Mount: 68 µF/10V Sprague 594D Series. 100 µF/10V AVX TPS Series. Through Hole: 68 µF/10V Sanyo OS-CON SA Series. 220 µF/35V Sanyo MV-GX Series. 220 µF/35V Nichicon PL Series. 220 µF/35V Panasonic HFQ Series.
3. Catch Diode Selection (D1) **A.** In normal operation, the average current of the catch diode is the load current times the catch diode duty cycle, 1-D (D is the switch duty cycle, which is approximately the output voltage divided by the input voltage). The largest value of the catch diode average current occurs at the maximum load current and maximum input voltage (minimum D). For normal operation, the catch diode current rating must be at least 1.3 times greater than its maximum average current. However, if the power supply design must withstand a continuous output short, the diode should have a current rating equal to the maximum current limit of the LM2672. The most stressful condition for this diode is a shorted output condition.	**3. Catch Diode Selection (D1)** **A.** Refer to the table shown in Table 5. In this example, a 1A, 20V Schottky diode will provide the best performance. If the circuit must withstand a continuous shorted output, a higher current Schottky diode is recommended.
B. The reverse voltage rating of the diode should be at least 1.25 times the maximum input voltage.	
C. Because of their fast switching speed and low forward voltage drop, Schottky diodes provide the best performance and efficiency. This Schottky diode must be located close to the LM2672 using short leads and short printed circuit traces.	
4. Input Capacitor (C_{IN}) A low ESR aluminum or tantalum bypass capacitor is needed between the input pin and ground to prevent large voltage transients from appearing at the input. This capacitor should be located close to the IC using short leads. In addition, the RMS current rating of the input capacitor should be selected to be at least ½ the DC load current. The capacitor manufacturer data sheet must be checked to assure that this current rating is not exceeded. The curves shown in Figure 28 show typical RMS current ratings for several different aluminum electrolytic capacitor values. A parallel connection of two or more capacitors may be required to increase the total minimum RMS current rating to suit the application requirements. For an aluminum electrolytic capacitor, the voltage rating should be at least 1.25 times the maximum input voltage. Caution must be exercised if solid tantalum capacitors are used. The tantalum capacitor voltage rating should be twice the maximum input voltage. The tables in Table 7 show the recommended application voltage for AVX TPS and Sprague 594D tantalum capacitors. It is also recommended that they be surge current tested by the manufacturer. The TPS series available from AVX, and the 593D and 594D series from Sprague are all surge current tested. Another approach to minimize the surge current stresses on the input capacitor is to add a small inductor in series with the input supply line. Use caution when using ceramic capacitors for input bypassing, because it may cause severe ringing at the V_{IN} pin.	**4. Input Capacitor (C_{IN})** The important parameters for the input capacitor are the input voltage rating and the RMS current rating. With a maximum input voltage of 12V, an aluminum electrolytic capacitor with a voltage rating greater than 15V (1.25 × V_{IN}) would be needed. The next higher capacitor voltage rating is 16V. The RMS current rating requirement for the input capacitor in a buck regulator is approximately ½ the DC load current. In this example, with a 1A load, a capacitor with a RMS current rating of at least 500 mA is needed. The curves shown in Figure 28 can be used to select an appropriate input capacitor. From the curves, locate the 16V line and note which capacitor values have RMS current ratings greater than 500 mA. For a through hole design, a 330 µF/16V electrolytic capacitor (Panasonic HFQ series, Nichicon PL, Sanyo MV-GX series or equivalent) would be adequate. Other types or other manufacturers' capacitors can be used provided the RMS ripple current ratings are adequate. Additionally, for a complete surface mount design, electrolytic capacitors such as the Sanyo CV-C or CV-BS and the Nichicon WF or UR and the NIC Components NACZ series could be considered. For surface mount designs, solid tantalum capacitors can be used, but caution must be exercised with regard to the capacitor surge current rating and voltage rating. In this example, checking Table 7, and the Sprague 594D series datasheet, a Sprague 594D 15 µF, 25V capacitor is adequate.
5. Boost Capacitor (C_B) This capacitor develops the necessary voltage to turn the switch gate on fully. All applications should use a 0.01 µF, 50V ceramic capacitor.	**5. Boost Capacitor (C_B)** For this application, and all applications, use a 0.01 µF, 50V ceramic capacitor.

Copyright © 1998–2013, Texas Instruments Incorporated

PROCEDURE (Fixed Output Voltage Version)	EXAMPLE (Fixed Output Voltage Version)
6. Soft-Start Capacitor (C_{SS} - optional) This capacitor controls the rate at which the device starts up. The formula for the soft-start capacitor C_{SS} is: $$C_{SS} \approx (I_{SS} \cdot t_{SS}) / [V_{SSTH} + 2.6V \cdot (\frac{V_{OUT} + V_{SCHOTTKY}}{V_{IN}})] \quad (1)$$ where: I_{SS} = Soft-Start Current: 4.5 µA typical. t_{SS} = Soft-Start Time: Selected. V_{SSTH} = Soft-Start Threshold Voltage :0.63V typical. V_{OUT} = Output Voltage: Selected. $V_{SCHOTTKY}$ = Schottky Diode Voltage Drop: 0.4V typical. V_{IN} = Input Voltage: Selected. If this feature is not desired, leave this pin open. With certain softstart capacitor values and operating conditions, the LM2672 can exhibit an overshoot on the output voltage during turn on. Especially when starting up into no load or low load, the softstart function may not be effective in preventing a larger voltage overshoot on the output. With larger loads or lower input voltages during startup this effect is minimized. In particular, avoid using softstart capacitors between 0.033µF and 1µF.	**6. Soft-Start Capacitor (C_{SS} - optional)** For this application, selecting a start-up time of 10 ms and using the formula for C_{SS} results in a value of: $$C_{SS} \approx (4.5\ \mu A \cdot 10\ ms) / [0.63V + 2.6V \cdot (\frac{5V + 0.4V}{12V})]$$ $$= 25\ nF \approx 0.022\ \mu F. \quad (2)$$
7. Frequency Synchronization (optional) The LM2672 (oscillator) can be synchronized to run with an external oscillator, using the sync pin (pin 3). By doing so, the LM2672 can be operated at higher frequencies than the standard frequency of 260 kHz. This allows for a reduction in the size of the inductor and output capacitor. As shown in the drawing below, a signal applied to a RC filter at the sync pin causes the device to synchronize to the frequency of that signal. For a signal with a peak-to-peak amplitude of 3V or greater, a 1 kΩ resistor and a 100 pF capacitor are suitable values. 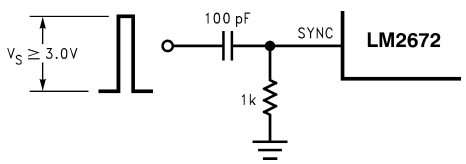 	**7. Frequency Synchronization (optional)** For all applications, use a 1 kΩ resistor and a 100 pF capacitor for the RC filter.

Inductor Value Selection Guides

(For Continuous Mode Operation)

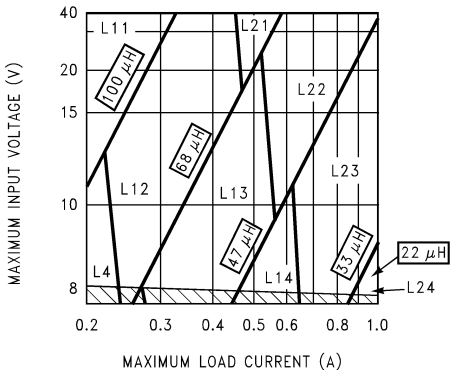

Figure 24. LM2672-3.3

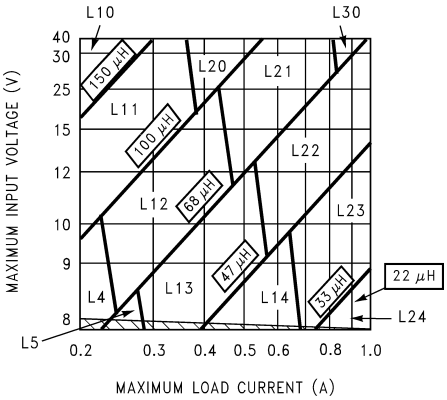

Figure 25. LM2672-5.0

Copyright © 1998–2013, Texas Instruments Incorporated

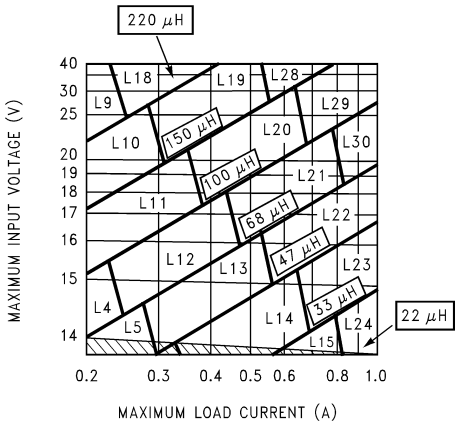

Figure 26. LM2672-12

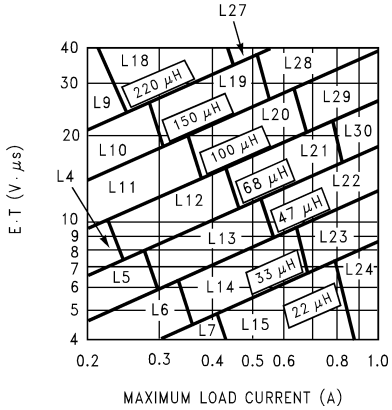

Figure 27. LM2672-ADJ

Table 1. Inductor Manufacturers' Part Numbers

Ind. Ref. Desg.	Inductance (μH)	Current (A)	Schott		Renco		Pulse Engineering		Coilcraft
			Through Hole	Surface Mount	Through Hole	Surface Mount	Through Hole	Surface Mount	Surface Mount
L4	68	0.32	67143940	67144310	RL-1284-68-43	RL1500-68	PE-53804	PE-53804-S	DO1608-683
L5	47	0.37	67148310	67148420	RL-1284-47-43	RL1500-47	PE-53805	PE-53805-S	DO1608-473
L6	33	0.44	67148320	67148430	RL-1284-33-43	RL1500-33	PE-53806	PE-53806-S	DO1608-333
L7	22	0.52	67148330	67148440	RL-1284-22-43	RL1500-22	PE-53807	PE-53807-S	DO1608-223
L9	220	0.32	67143960	67144330	RL-5470-3	RL1500-220	PE-53809	PE-53809-S	DO3308-224
L10	150	0.39	67143970	67144340	RL-5470-4	RL1500-150	PE-53810	PE-53810-S	DO3308-154
L11	100	0.48	67143980	67144350	RL-5470-5	RL1500-100	PE-53811	PE-53811-S	DO3308-104
L12	68	0.58	67143990	67144360	RL-5470-6	RL1500-68	PE-53812	PE-53812-S	DO3308-683
L13	47	0.70	67144000	67144380	RL-5470-7	RL1500-47	PE-53813	PE-53813-S	DO3308-473
L14	33	0.83	67148340	67148450	RL-1284-33-43	RL1500-33	PE-53814	PE-53814-S	DO3308-333
L15	22	0.99	67148350	67148460	RL-1284-22-43	RL1500-22	PE-53815	PE-53815-S	DO3308-223
L18	220	0.55	67144040	67144420	RL-5471-2	RL1500-220	PE-53818	PE-53818-S	DO3316-224
L19	150	0.66	67144050	67144430	RL-5471-3	RL1500-150	PE-53819	PE-53819-S	DO3316-154
L20	100	0.82	67144060	67144440	RL-5471-4	RL1500-100	PE-53820	PE-53820-S	DO3316-104
L21	68	0.99	67144070	67144450	RL-5471-5	RL1500-68	PE-53821	PE-53821-S	DO3316-683
L22	47	1.17	67144080	67144460	RL-5471-6	—	PE-53822	PE-53822-S	DO3316-473
L23	33	1.40	67144090	67144470	RL-5471-7	—	PE-53823	PE-53823-S	DO3316-333
L24	22	1.70	67148370	67148480	RL-1283-22-43	—	PE-53824	PE-53824-S	DO3316-223
L27	220	1.00	67144110	67144490	RL-5471-2	—	PE-53827	PE-53827-S	DO5022P-224
L28	150	1.20	67144120	67144500	RL-5471-3	—	PE-53828	PE-53828-S	DO5022P-154
L29	100	1.47	67144130	67144510	RL-5471-4	—	PE-53829	PE-53829-S	DO5022P-104
L30	68	1.78	67144140	67144520	RL-5471-5	—	PE-53830	PE-53830-S	DO5022P-683

Copyright © 1998–2013, Texas Instruments Incorporated

Table 2. Inductor Manufacturers' Phone Numbers

Coilcraft Inc.	Phone	(800) 322-2645
	FAX	(708) 639-1469
Coilcraft Inc., Europe	Phone	+44 1236 730 595
	FAX	+44 1236 730 627
Pulse Engineering Inc.	Phone	(619) 674-8100
	FAX	(619) 674-8262
Pulse Engineering Inc.,	Phone	+353 93 24 107
Europe	FAX	+353 93 24 459
Renco Electronics Inc.	Phone	(800) 645-5828
	FAX	(516) 586-5562
Schott Corp.	Phone	(612) 475-1173
	FAX	(612) 475-1786

Table 3. Output Capacitor Table

Output Voltage (V)	Inductance (µH)	Output Capacitor					
		Surface Mount		Through Hole			
		Sprague 594D Series (µF/V)	AVX TPS Series (µF/V)	Sanyo OS-CON SA Series (µF/V)	Sanyo MV-GX Series (µF/V)	Nichicon PL Series (µF/V)	Panasonic HFQ Series (µF/V)
3.3	22	120/6.3	100/10	100/10	330/35	330/35	330/35
	33	120/6.3	100/10	68/10	220/35	220/35	220/35
	47	68/10	100/10	68/10	150/35	150/35	150/35
	68	120/6.3	100/10	100/10	120/35	120/35	120/35
	100	120/6.3	100/10	100/10	120/35	120/35	120/35
	150	120/6.3	100/10	100/10	120/35	120/35	120/35
5.0	22	100/16	100/10	100/10	330/35	330/35	330/35
	33	68/10	10010	68/10	220/35	220/35	220/35
	47	68/10	100/10	68/10	150/35	150/35	150/35
	68	100/16	100/10	100/10	120/35	120/35	120/35
	100	100/16	100/10	100/10	120/35	120/35	120/35
	150	100/16	100/10	100/10	120/35	120/35	120/35
12	22	120/20	(2×) 68/20	68/20	330/35	330/35	330/35
	33	68/25	68/20	68/20	220/35	220/35	220/35
	47	47/20	68/20	47/20	150/35	150/35	150/35
	68	47/20	68/20	47/20	120/35	120/35	120/35
	100	47/20	68/20	47/20	120/35	120/35	120/35
	150	47/20	68/20	47/20	120/35	120/35	120/35
	220	47/20	68/20	47/20	120/35	120/35	120/35

Copyright © 1998–2013, Texas Instruments Incorporated

Table 4. Capacitor Manufacturers' Phone Numbers

Nichicon Corp.	Phone	(847) 843-7500
	FAX	(847) 843-2798
Panasonic	Phone	(714) 373-7857
	FAX	(714) 373-7102
AVX Corp.	Phone	(803) 448-9411
	FAX	(803) 448-1943
Sprague/Vishay	Phone	(207) 324-4140
	FAX	(207) 324-7223
Sanyo Corp.	Phone	(619) 661-6322
	FAX	(619) 661-1055

Table 5. Schottky Diode Selection Table

V_R	1A Diodes		3A Diodes	
	Surface Mount	**Through Hole**	**Surface Mount**	**Through Hole**
20V	SK12	1N5817	SK32	1N5820
	B120	SR102		SR302
30V	SK13	1N5818	SK33	1N5821
	B130	11DQ03	30WQ03F	31DQ03
	MBRS130	SR103		
40V	SK14	1N5819	SK34	1N5822
	B140	11DQ04	30BQ040	MBR340
	MBRS140	SR104	30WQ04F	31DQ04
	10BQ040		MBRS340	SR304
	10MQ040		MBRD340	
	15MQ040			
50V	SK15	MBR150	SK35	MBR350
	B150	11DQ05	30WQ05F	31DQ05
	10BQ050	SR105		SR305

Table 6. Diode Manufacturers' Phone Numbers

International Rectifier Corp.	Phone	(310) 322-3331
	FAX	(310) 322-3332
Motorola, Inc.	Phone	(800) 521-6274
	FAX	(602) 244-6609
General Instruments Corp.	Phone	(516) 847-3000
	FAX	(516) 847-3236
Diodes, Inc.	Phone	(805) 446-4800
	FAX	(805) 446-4850

Copyright © 1998–2013, Texas Instruments Incorporated

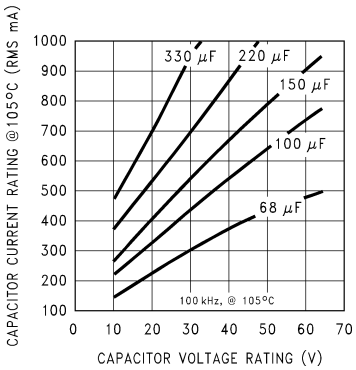

Figure 28. RMS Current Ratings for Low ESR Electrolytic Capacitors (Typical)

Table 7. Recommended Application Voltage for AVX TPS and Sprague 594D Tantalum Chip Capacitors Derated for 85°C.

Recommended Application Voltage	Voltage Rating
+85°C Rating	
3.3	6.3
5	10
10	20
12	25
15	35

Table 8. Sprague 594D

Recommended Application Voltage	Voltage Rating
+85°C Rating	
2.5	4
3.3	6.3
5	10
8	16
12	20
18	25
24	35
29	50

Copyright © 1998–2013, Texas Instruments Incorporated

LM2672 Series Buck Regulator Design Procedure (Adjustable Output)

PROCEDURE (Adjustable Output Voltage Version)	EXAMPLE (Adjustable Output Voltage Version)
To simplify the buck regulator design procedure, Texas Instruments is making available computer design software to be used with the SIMPLE SWITCHER*line of switching regulators.* ***LM267X Made Simple* version 6.0 is available on** Windows*3.1, NT, or 95 operating systems.*	
Given: V_{OUT} = Regulated Output Voltage V_{IN}(max) = Maximum Input Voltage I_{LOAD}(max) = Maximum Load Current F = Switching Frequency *(Fixed at a nominal 260 kHz).*	**Given:** V_{OUT} = 20V V_{IN}(max) = 28V I_{LOAD}(max) = 1A F = Switching Frequency *(Fixed at a nominal 260 kHz).*
1. Programming Output Voltage (Selecting R_1 and R_2, as shown in Figure 23) Use the following formula to select the appropriate resistor values. $V_{OUT} = V_{REF}\left(1 + \frac{R_2}{R_1}\right)$ where V_{REF} = 1.21V (3) Select a value for R_1 between 240Ω and 1.5 kΩ. The lower resistor values minimize noise pickup in the sensitive feedback pin. (For the lowest temperature coefficient and the best stability with time, use 1% metal film resistors.) $R_2 = R_1\left(\frac{V_{OUT}}{V_{REF}} - 1\right)$ (5)	**1. Programming Output Voltage** (Selecting R_1 and R_2, as shown in Figure 23) Select R_1 to be 1 kΩ, 1%. Solve for R_2. $R_2 = R_1\left(\frac{V_{OUT}}{V_{REF}} - 1\right) = 1\,k\Omega\left(\frac{20V}{1.23V} - 1\right)$ (4) R_2 = 1 kΩ (16.53 − 1) = 15.53 kΩ, closest 1% value is 15.4 kΩ. R_2 = 15.4 kΩ.
2. Inductor Selection (L1) **A.** Calculate the inductor Volt • microsecond constant E • T (V • μs), from the following formula: $E \cdot T = (V_{IN(MAX)} - V_{OUT} - V_{SAT}) \cdot \frac{V_{OUT} + V_D}{V_{IN(MAX)} - V_{SAT} + V_D} \cdot \frac{1000}{260}\ (V \cdot \mu s)$ (6) where V_{SAT}=internal switch saturation voltage=0.25V and V_D = diode forward voltage drop = 0.5V	**2. Inductor Selection (L1)** **A.** Calculate the inductor Volt • microsecond constant (E • T), $E \cdot T = (28 - 20 - 0.25) \cdot \frac{20 + 0.5}{28 - 0.25 + 0.5} \cdot \frac{1000}{260}\ (V \cdot \mu s)$ $E \cdot T = (7.75) \cdot \frac{20.5}{28.25} \cdot 3.85\ (V \cdot \mu s) = 21.6\ (V \cdot \mu s)$ (7)
B. Use the E • T value from the previous formula and match it with the E • T number on the vertical axis of the Inductor Value Selection Guide shown in Figure 27.	**B.** E • T = 21.6 (V • μs)
C. On the horizontal axis, select the maximum load current.	**C.** I_{LOAD}(max) = 1A
D. Identify the inductance region intersected by the E • T value and the Maximum Load Current value. Each region is identified by an inductance value and an inductor code (LXX).	**D.** From the inductor value selection guide shown in Figure 27, the inductance region intersected by the 21.6 (V • μs) horizontal line and the 1A vertical line is 68 μH, and the inductor code is L30.
E. Select an appropriate inductor from the four manufacturer's part numbers listed in Table 1. For information on the different types of inductors, see the inductor selection in the fixed output voltage design procedure.	**E.** From the table in Table 1, locate line L30, and select an inductor part number from the list of manufacturers' part numbers.
3. Output Capacitor Selection (C_{OUT}) **A.** Select an output capacitor from the capacitor code selection guide in Table 9. Using the inductance value found in the inductor selection guide, step 1, locate the appropriate capacitor code corresponding to the desired output voltage.	**3. Output Capacitor Selection (C_{OUT})** **A.** Use the appropriate row of the capacitor code selection guide, in Table 9. For this example, use the 15–20V row. The capacitor code corresponding to an inductance of 68 μH is C20.

Copyright © 1998–2013, Texas Instruments Incorporated

PROCEDURE (Adjustable Output Voltage Version)	EXAMPLE (Adjustable Output Voltage Version)
B. Select an appropriate capacitor value and voltage rating, using the capacitor code, from the output capacitor selection table in Table 10. There are two solid tantalum (surface mount) capacitor manufacturers and four electrolytic (through hole) capacitor manufacturers to choose from. It is recommended that both the manufacturers and the manufacturer's series that are listed in the table be used. A table listing the manufacturers' phone numbers is located in Table 4.	**B.** From the output capacitor selection table in Table 10, choose a capacitor value (and voltage rating) that intersects the capacitor code(s) selected in section A, C20 (Table 10). The capacitance and voltage rating values corresponding to the capacitor code C20 are the: Surface Mount: 33 µF/25V Sprague 594D Series. 33 µF/25V AVX TPS Series. Through Hole: 33 µF/25V Sanyo OS-CON SC Series. 120 µF/35V Sanyo MV-GX Series. 120 µF/35V Nichicon PL Series. 120 µF/35V Panasonic HFQ Series. Other manufacturers or other types of capacitors may also be used, provided the capacitor specifications (especially the 100 kHz ESR) closely match the characteristics of the capacitors listed in the output capacitor table. Refer to the capacitor manufacturers' data sheet for this information.
4. Catch Diode Selection (D1) **A.** In normal operation, the average current of the catch diode is the load current times the catch diode duty cycle, 1-D (D is the switch duty cycle, which is approximately V_{OUT}/V_{IN}). The largest value of the catch diode average current occurs at the maximum input voltage (minimum D). For normal operation, the catch diode current rating must be at least 1.3 times greater than its maximum average current. However, if the power supply design must withstand a continuous output short, the diode should have a current rating greater than the maximum current limit of the LM2672. The most stressful condition for this diode is a shorted output condition. **B.** The reverse voltage rating of the diode should be at least 1.25 times the maximum input voltage. **C.** Because of their fast switching speed and low forward voltage drop, Schottky diodes provide the best performance and efficiency. The Schottky diode must be located close to the LM2672 using short leads and short printed circuit traces.	**4. Catch Diode Selection (D1)** **A.** Refer to the table shown in Table 5. Schottky diodes provide the best performance, and in this example a 1A, 40V Schottky diode would be a good choice. If the circuit must withstand a continuous shorted output, a higher current (at least 2.2A) Schottky diode is recommended.
5. Input Capacitor (C_{IN}) A low ESR aluminum or tantalum bypass capacitor is needed between the input pin and ground to prevent large voltage transients from appearing at the input. This capacitor should be located close to the IC using short leads. In addition, the RMS current rating of the input capacitor should be selected to be at least ½ the DC load current. The capacitor manufacturer data sheet must be checked to assure that this current rating is not exceeded. The curves shown in Figure 28 show typical RMS current ratings for several different aluminum electrolytic capacitor values. A parallel connection of two or more capacitors may be required to increase the total minimum RMS current rating to suit the application requirements. For an aluminum electrolytic capacitor, the voltage rating should be at least 1.25 times the maximum input voltage. Caution must be exercised if solid tantalum capacitors are used. The tantalum capacitor voltage rating should be twice the maximum input voltage. The tables in Table 7 show the recommended application voltage for AVX TPS and Sprague 594D tantalum capacitors. It is also recommended that they be surge current tested by the manufacturer. The TPS series available from AVX, and the 593D and 594D series from Sprague are all surge current tested. Another approach to minimize the surge current stresses on the input capacitor is to add a small inductor in series with the input supply line. Use caution when using ceramic capacitors for input bypassing, because it may cause severe ringing at the V_{IN} pin.	**5. Input Capacitor (C_{IN})** The important parameters for the input capacitor are the input voltage rating and the RMS current rating. With a maximum input voltage of 28V, an aluminum electrolytic capacitor with a voltage rating of at least 35V ($1.25 \times V_{IN}$) would be needed. The RMS current rating requirement for the input capacitor in a buck regulator is approximately ½ the DC load current. In this example, with a 1A load, a capacitor with a RMS current rating of at least 500 mA is needed. The curves shown in Figure 28 can be used to select an appropriate input capacitor. From the curves, locate the 35V line and note which capacitor values have RMS current ratings greater than 500 mA. For a through hole design, a 330 µF/35V electrolytic capacitor (Panasonic HFQ series, Nichicon PL, Sanyo MV-GX series or equivalent) would be adequate. Other types or other manufacturers' capacitors can be used provided the RMS ripple current ratings are adequate. Additionally, for a complete surface mount design, electrolytic capacitors such as the Sanyo CV-C or CV-BS and the Nichicon WF or UR and the NIC Components NACZ series could be considered. For surface mount designs, solid tantalum capacitors can be used, but caution must be exercised with regard to the capacitor surge current rating and voltage rating. In this example, checking Table 7, and the Sprague 594D series datasheet, a Sprague 594D 15 µF, 50V capacitor is adequate.
6. Boost Capacitor (C_B) This capacitor develops the necessary voltage to turn the switch gate on fully. All applications should use a 0.01 µF, 50V ceramic capacitor. If the soft-start and frequency synchronization features are desired, look at steps 6 and 7 in the fixed output design procedure.	**6. Boost Capacitor (C_B)** For this application, and all applications, use a 0.01 µF, 50V ceramic capacitor.

Copyright © 1998–2013, Texas Instruments Incorporated

Table 9. Capacitor Code Selection Guide

Case Style[1]	Output Voltage (V)	Inductance (µH)						
		22	33	47	68	100	150	220
SM and TH	1.21–2.50	—	—	—	—	C1	C2	C3
SM and TH	2.50–3.75	—	—	—	C1	C2	C3	C3
SM and TH	3.75–5.0	—	—	C4	C5	C6	C6	C6
SM and TH	5.0–6.25	—	C4	C7	C6	C6	C6	C6
SM and TH	6.25–7.5	C8	C4	C7	C6	C6	C6	C6
SM and TH	7.5–10.0	C9	C10	C11	C12	C13	C13	C13
SM and TH	10.0–12.5	C14	C11	C12	C12	C13	C13	C13
SM and TH	12.5–15.0	C15	C16	C17	C17	C17	C17	C17
SM and TH	15.0–20.0	C18	C19	C20	C20	C20	C20	C20
SM and TH	20.0–30.0	C21	C22	C22	C22	C22	C22	C22
TH	30.0–37.0	C23	C24	C24	C25	C25	C25	C25

(1) SM - Surface Mount, TH - Through Hole

Table 10. Output Capacitor Selection Table

Output Capacitor						
Cap. Ref. Desg. #	Surface Mount		Through Hole			
	Sprague	AVX TPS	Sanyo OS-CON	Sanyo MV-GX	Nichicon	Panasonic
	594D Series	Series	SA Series	Series	PL Series	HFQ Series
	(µF/V)	(µF/V)	(µF/V)	(µF/V)	(µF/V)	(µF/V)
C1	120/6.3	100/10	100/10	220/35	220/35	220/35
C2	120/6.3	100/10	100/10	150/35	150/35	150/35
C3	120/6.3	100/10	100/35	120/35	120/35	120/35
C4	68/10	100/10	68/10	220/35	220/35	220/35
C5	100/16	100/10	100/10	150/35	150/35	150/35
C6	100/16	100/10	100/10	120/35	120/35	120/35
C7	68/10	100/10	68/10	150/35	150/35	150/35
C8	100/16	100/10	100/10	330/35	330/35	330/35
C9	100/16	100/16	100/16	330/35	330/35	330/35
C10	100/16	100/16	68/16	220/35	220/35	220/35
C11	100/16	100/16	68/16	150/35	150/35	150/35
C12	100/16	100/16	68/16	120/35	120/35	120/35
C13	100/16	100/16	100/16	120/35	120/35	120/35
C14	100/16	100/16	100/16	220/35	220/35	220/35
C15	47/20	68/20	47/20	220/35	220/35	220/35
C16	47/20	68/20	47/20	150/35	150/35	150/35
C17	47/20	68/20	47/20	120/35	120/35	120/35
C18	68/25	(2×) 33/25	47/25[1]	220/35	220/35	220/35
C19	33/25	33/25	33/25[1]	150/35	150/35	150/35
C20	33/25	33/25	33/25[1]	120/35	120/35	120/35
C21	33/35	(2×) 22/25	See[2]	150/35	150/35	150/35
C22	33/35	22/35	See[2]	120/35	120/35	120/35
C23	See[2]	See[2]	See[2]	220/50	100/50	120/50
C24	See[2]	See[2]	See[2]	150/50	100/50	120/50
C25	See[2]	See[2]	See[2]	150/50	82/50	82/50

(1) The SC series of Os-Con capacitors (others are SA series)
(2) The voltage ratings of the surface mount tantalum chip and Os-Con capacitors are too low to work at these voltages.

Copyright © 1998–2013, Texas Instruments Incorporated

Application Information

TYPICAL SURFACE MOUNT PC BOARD LAYOUT, FIXD OUTPUT (4X SIZE)

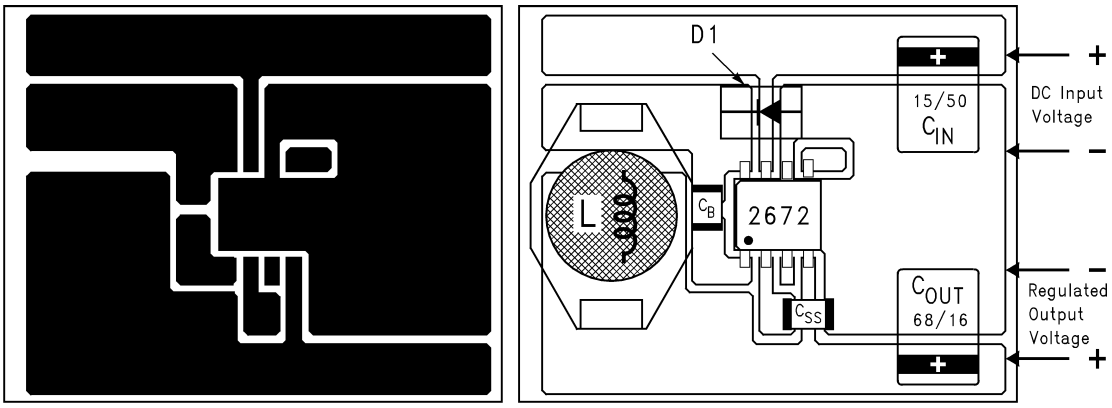

C_{IN} - 15 µF, 50V, Solid Tantalum Sprague, “594D series”
C_{OUT} - 68 µF, 16V, Solid Tantalum Sprague, “594D series”
D1 - 1A, 40V Schottky Rectifier, Surface Mount
L1 - 33 µH, L23, Coilcraft DO3316
C_B - 0.01 µF, 50V, Ceramic

TYPICAL SURFACE MOUNT PC BOARD LAYOUT, ADJUSTABLE OUTPUT (4X SIZE)

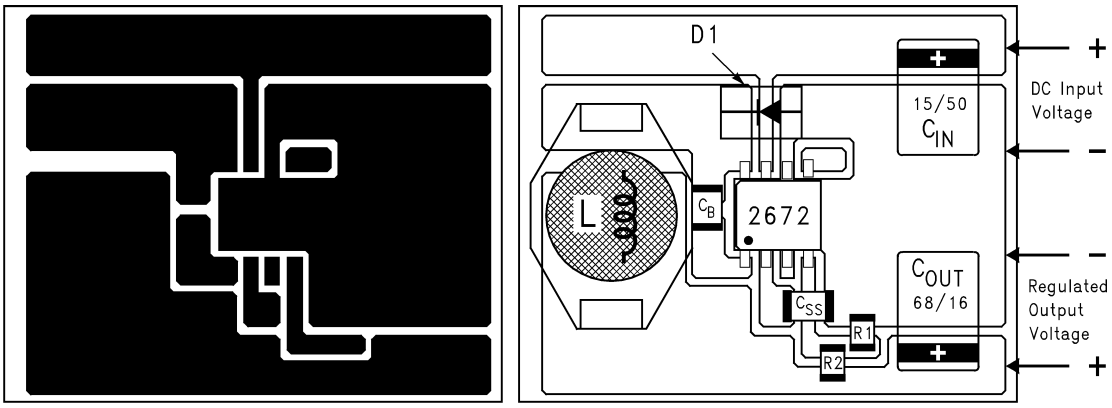

C_{IN} - 15 µF, 50V, Solid Tantalum Sprague, “594D series”
C_{OUT} - 33 µF, 25V, Solid Tantalum Sprague, “594D series”
D1 - 1A, 40V Schottky Rectifier, Surface Mount
L1 - 68 µH, L30, Coilcraft DO3316
C_B - 0.01 µF, 50V, Ceramic
R1 - 1k, 1%
R2 - Use formula in Design Procedure

Figure 29. PC Board Layout

Layout is very important in switching regulator designs. Rapidly switching currents associated with wiring inductance can generate voltage transients which can cause problems. For minimal inductance and ground loops, the wires indicated by **heavy lines (in Figure 22 and Figure 23) should be wide printed circuit traces and should be kept as short as possible.** For best results, external components should be located as close to the switcher IC as possible using ground plane construction or single point grounding.

Copyright © 1998–2013, Texas Instruments Incorporated

If **open core inductors are used,** special care must be taken as to the location and positioning of this type of inductor. Allowing the inductor flux to intersect sensitive feedback, IC ground path, and C_{OUT} wiring can cause problems.

When using the adjustable version, special care must be taken as to the location of the feedback resistors and the associated wiring. Physically locate both resistors near the IC, and route the wiring away from the inductor, especially an open core type of inductor.

WSON PACKAGE DEVICES

The LM2672 is offered in the 16 lead WSON surface mount package to allow for increased power dissipation compared to the SOIC-8 and PDIP.

The Die Attach Pad (DAP) can and should be connected to PCB Ground plane/island. For CAD and assembly guidelines refer to Application Note AN-1187 at http://www.ti.com/lsds/ti/analog/powermanagement/power_portal.page.

REVISION HISTORY

Changes from Revision J (April 2013) to Revision K	Page
• Changed layout of National Data Sheet to TI format	23

Copyright © 1998–2013, Texas Instruments Incorporated

PACKAGING INFORMATION

Orderable Device	Status (1)	Package Type	Package Drawing	Pins	Package Qty	Eco Plan (2)	Lead/Ball Finish (6)	MSL Peak Temp (3)	Op Temp (°C)	Device Marking (4/5)	Samples
LM2672LD-ADJ/NOPB	ACTIVE	WSON	NHN	16	1000	Green (RoHS & no Sb/Br)	CU SN	Level-3-260C-168 HR	-40 to 125	S0004B	Samples
LM2672M-12	NRND	SOIC	D	8	95	TBD	Call TI	Call TI	-40 to 125	2672 M-12	
LM2672M-12/NOPB	ACTIVE	SOIC	D	8	95	Green (RoHS & no Sb/Br)	CU SN	Level-1-260C-UNLIM	-40 to 125	2672 M-12	Samples
LM2672M-3.3	NRND	SOIC	D	8	95	TBD	Call TI	Call TI	-40 to 125	2672 M3.3	
LM2672M-3.3/NOPB	ACTIVE	SOIC	D	8	95	Green (RoHS & no Sb/Br)	CU SN	Level-1-260C-UNLIM	-40 to 125	2672 M3.3	Samples
LM2672M-5.0	NRND	SOIC	D	8	95	TBD	Call TI	Call TI	-40 to 125	2672 M5.0	
LM2672M-5.0/NOPB	ACTIVE	SOIC	D	8	95	Green (RoHS & no Sb/Br)	CU SN	Level-1-260C-UNLIM	-40 to 125	2672 M5.0	Samples
LM2672M-ADJ	NRND	SOIC	D	8	95	TBD	Call TI	Call TI	-40 to 125	2672 MADJ	
LM2672M-ADJ/NOPB	ACTIVE	SOIC	D	8	95	Green (RoHS & no Sb/Br)	CU SN	Level-1-260C-UNLIM	-40 to 125	2672 MADJ	Samples
LM2672MX-12/NOPB	ACTIVE	SOIC	D	8	2500	Green (RoHS & no Sb/Br)	CU SN	Level-1-260C-UNLIM	-40 to 125	2672 M-12	Samples
LM2672MX-3.3/NOPB	ACTIVE	SOIC	D	8	2500	Green (RoHS & no Sb/Br)	CU SN	Level-1-260C-UNLIM	-40 to 125	2672 M3.3	Samples
LM2672MX-5.0	NRND	SOIC	D	8	2500	TBD	Call TI	Call TI	-40 to 125	2672 M5.0	
LM2672MX-5.0/NOPB	ACTIVE	SOIC	D	8	2500	Green (RoHS & no Sb/Br)	CU SN	Level-1-260C-UNLIM	-40 to 125	2672 M5.0	Samples
LM2672MX-ADJ	NRND	SOIC	D	8	2500	TBD	Call TI	Call TI	-40 to 125	2672 MADJ	
LM2672MX-ADJ/NOPB	ACTIVE	SOIC	D	8	2500	Green (RoHS & no Sb/Br)	CU SN	Level-1-260C-UNLIM	-40 to 125	2672 MADJ	Samples
LM2672N-12/NOPB	ACTIVE	PDIP	P	8	40	Green (RoHS & no Sb/Br)	CU SN	Level-1-NA-UNLIM	-40 to 125	LM2672 N-12	Samples
LM2672N-3.3/NOPB	ACTIVE	PDIP	P	8	40	Green (RoHS & no Sb/Br)	CU SN	Level-1-NA-UNLIM	-40 to 125	LM2672 N-3.3	Samples

Orderable Device	Status (1)	Package Type	Package Drawing	Pins	Package Qty	Eco Plan (2)	Lead/Ball Finish (6)	MSL Peak Temp (3)	Op Temp (°C)	Device Marking (4/5)	Samples
LM2672N-5.0/NOPB	ACTIVE	PDIP	P	8	40	Green (RoHS & no Sb/Br)	CU SN	Level-1-NA-UNLIM	-40 to 125	LM2672 N-5.0	Samples
LM2672N-ADJ	LIFEBUY	PDIP	P	8	40	TBD	Call TI	Call TI	-40 to 125	LM2672 N-ADJ	
LM2672N-ADJ/NOPB	ACTIVE	PDIP	P	8	40	Green (RoHS & no Sb/Br)	CU SN	Level-1-NA-UNLIM	-40 to 125	LM2672 N-ADJ	Samples

(1) The marketing status values are defined as follows:
ACTIVE: Product device recommended for new designs.
LIFEBUY: TI has announced that the device will be discontinued, and a lifetime-buy period is in effect.
NRND: Not recommended for new designs. Device is in production to support existing customers, but TI does not recommend using this part in a new design.
PREVIEW: Device has been announced but is not in production. Samples may or may not be available.
OBSOLETE: TI has discontinued the production of the device.

(2) Eco Plan - The planned eco-friendly classification: Pb-Free (RoHS), Pb-Free (RoHS Exempt), or Green (RoHS & no Sb/Br) - please check http://www.ti.com/productcontent for the latest availability information and additional product content details.
TBD: The Pb-Free/Green conversion plan has not been defined.
Pb-Free (RoHS): TI's terms "Lead-Free" or "Pb-Free" mean semiconductor products that are compatible with the current RoHS requirements for all 6 substances, including the requirement that lead not exceed 0.1% by weight in homogeneous materials. Where designed to be soldered at high temperatures, TI Pb-Free products are suitable for use in specified lead-free processes.
Pb-Free (RoHS Exempt): This component has a RoHS exemption for either 1) lead-based flip-chip solder bumps used between the die and package, or 2) lead-based die adhesive used between the die and leadframe. The component is otherwise considered Pb-Free (RoHS compatible) as defined above.
Green (RoHS & no Sb/Br): TI defines "Green" to mean Pb-Free (RoHS compatible), and free of Bromine (Br) and Antimony (Sb) based flame retardants (Br or Sb do not exceed 0.1% by weight in homogeneous material)

(3) MSL, Peak Temp. - The Moisture Sensitivity Level rating according to the JEDEC industry standard classifications, and peak solder temperature.

(4) There may be additional marking, which relates to the logo, the lot trace code information, or the environmental category on the device.

(5) Multiple Device Markings will be inside parentheses. Only one Device Marking contained in parentheses and separated by a "~" will appear on a device. If a line is indented then it is a continuation of the previous line and the two combined represent the entire Device Marking for that device.

(6) Lead/Ball Finish - Orderable Devices may have multiple material finish options. Finish options are separated by a vertical ruled line. Lead/Ball Finish values may wrap to two lines if the finish value exceeds the maximum column width.

Important Information and Disclaimer: The information provided on this page represents TI's knowledge and belief as of the date that it is provided. TI bases its knowledge and belief on information provided by third parties, and makes no representation or warranty as to the accuracy of such information. Efforts are underway to better integrate information from third parties. TI has taken and continues to take reasonable steps to provide representative and accurate information but may not have conducted destructive testing or chemical analysis on incoming materials and chemicals. TI and TI suppliers consider certain information to be proprietary, and thus CAS numbers and other limited information may not be available for release.

In no event shall TI's liability arising out of such information exceed the total purchase price of the TI part(s) at issue in this document sold by TI to Customer on an annual basis.

TAPE AND REEL INFORMATION

REEL DIMENSIONS

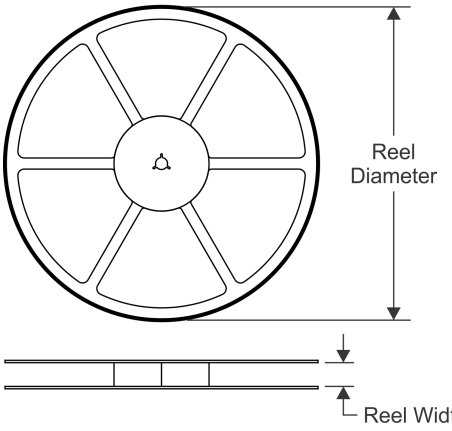

TAPE DIMENSIONS

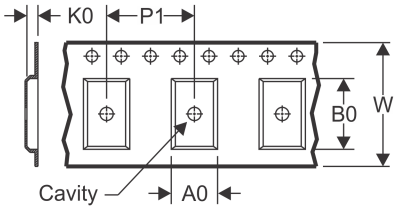

A0	Dimension designed to accommodate the component width
B0	Dimension designed to accommodate the component length
K0	Dimension designed to accommodate the component thickness
W	Overall width of the carrier tape
P1	Pitch between successive cavity centers

QUADRANT ASSIGNMENTS FOR PIN 1 ORIENTATION IN TAPE

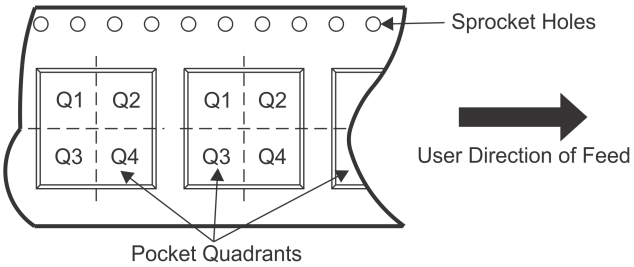

*All dimensions are nominal

Device	Package Type	Package Drawing	Pins	SPQ	Reel Diameter (mm)	Reel Width W1 (mm)	A0 (mm)	B0 (mm)	K0 (mm)	P1 (mm)	W (mm)	Pin1 Quadrant
LM2672LD-ADJ/NOPB	WSON	NHN	16	1000	178.0	12.4	5.3	5.3	1.3	8.0	12.0	Q1
LM2672MX-12/NOPB	SOIC	D	8	2500	330.0	12.4	6.5	5.4	2.0	8.0	12.0	Q1
LM2672MX-3.3/NOPB	SOIC	D	8	2500	330.0	12.4	6.5	5.4	2.0	8.0	12.0	Q1
LM2672MX-5.0	SOIC	D	8	2500	330.0	12.4	6.5	5.4	2.0	8.0	12.0	Q1
LM2672MX-5.0/NOPB	SOIC	D	8	2500	330.0	12.4	6.5	5.4	2.0	8.0	12.0	Q1
LM2672MX-ADJ	SOIC	D	8	2500	330.0	12.4	6.5	5.4	2.0	8.0	12.0	Q1
LM2672MX-ADJ/NOPB	SOIC	D	8	2500	330.0	12.4	6.5	5.4	2.0	8.0	12.0	Q1

TAPE AND REEL BOX DIMENSIONS

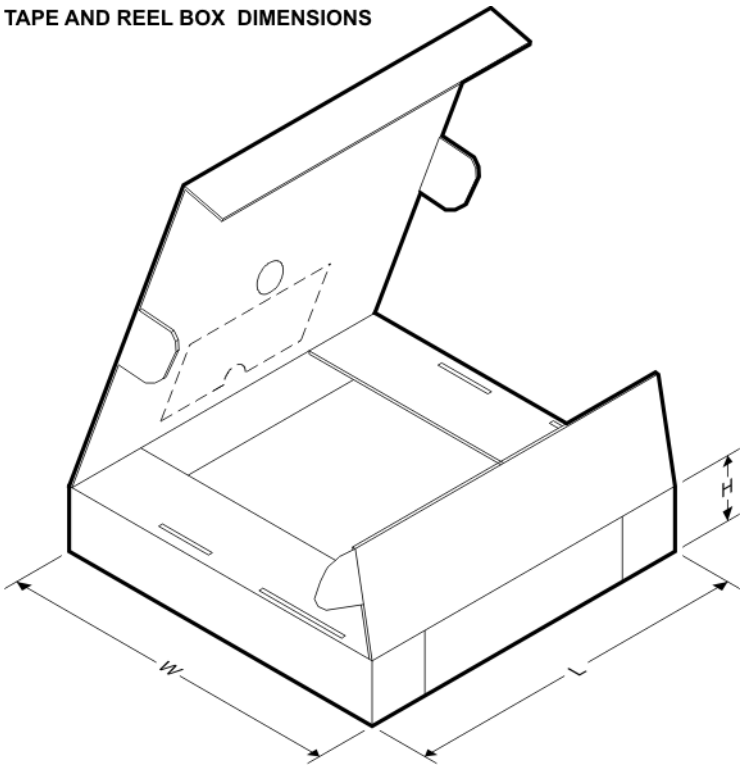

*All dimensions are nominal

Device	Package Type	Package Drawing	Pins	SPQ	Length (mm)	Width (mm)	Height (mm)
LM2672LD-ADJ/NOPB	WSON	NHN	16	1000	213.0	191.0	55.0
LM2672MX-12/NOPB	SOIC	D	8	2500	367.0	367.0	35.0
LM2672MX-3.3/NOPB	SOIC	D	8	2500	367.0	367.0	35.0
LM2672MX-5.0	SOIC	D	8	2500	367.0	367.0	35.0
LM2672MX-5.0/NOPB	SOIC	D	8	2500	367.0	367.0	35.0
LM2672MX-ADJ	SOIC	D	8	2500	367.0	367.0	35.0
LM2672MX-ADJ/NOPB	SOIC	D	8	2500	367.0	367.0	35.0

P (R–PDIP–T8) PLASTIC DUAL–IN–LINE PACKAGE

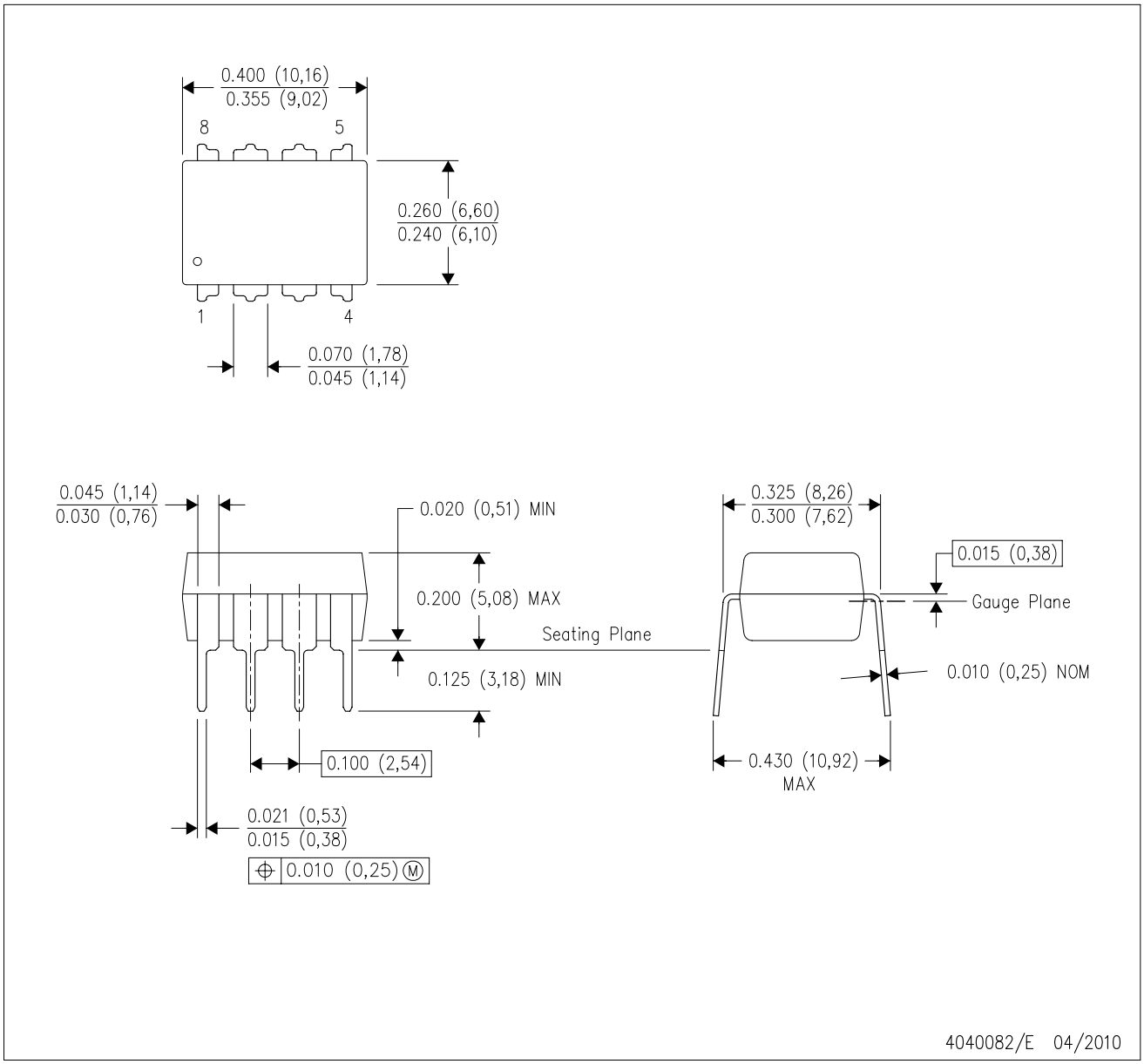

NOTES:
A. All linear dimensions are in inches (millimeters).
B. This drawing is subject to change without notice.
C. Falls within JEDEC MS–001 variation BA.

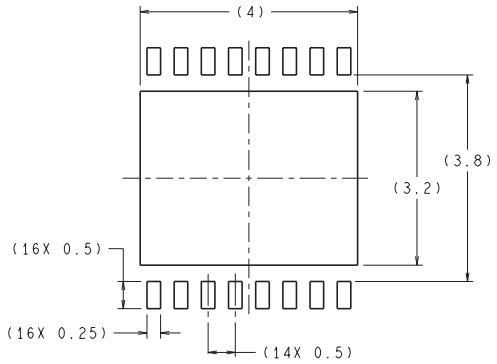

RECOMMENDED LAND PATTERN
1:1 RATIO WITH PKG SOLDER PADS

DIMENSIONS ARE IN MILLIMETERS

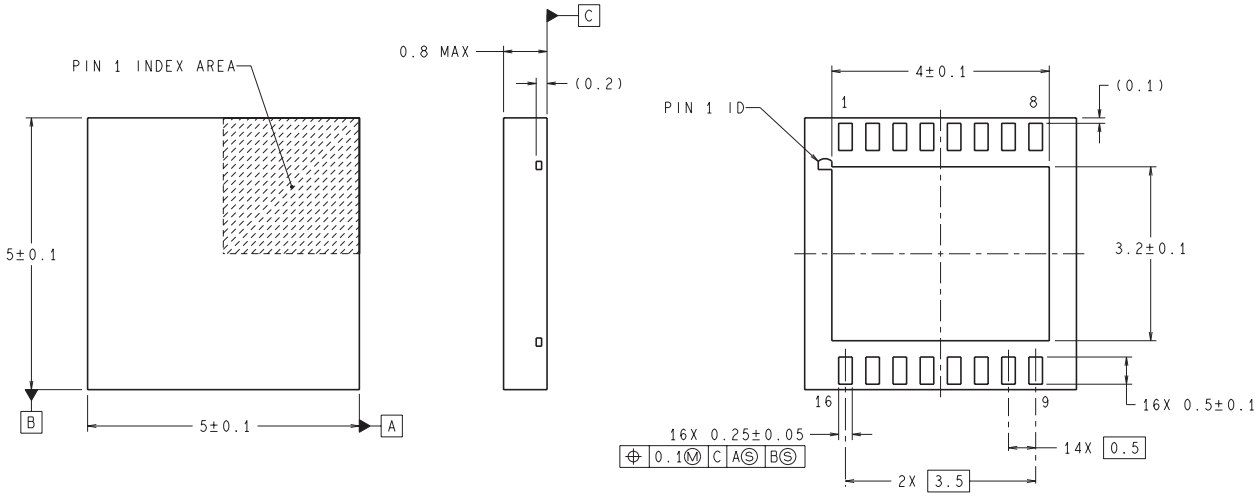

LDA16A (REV A)

D (R–PDSO–G8) PLASTIC SMALL OUTLINE

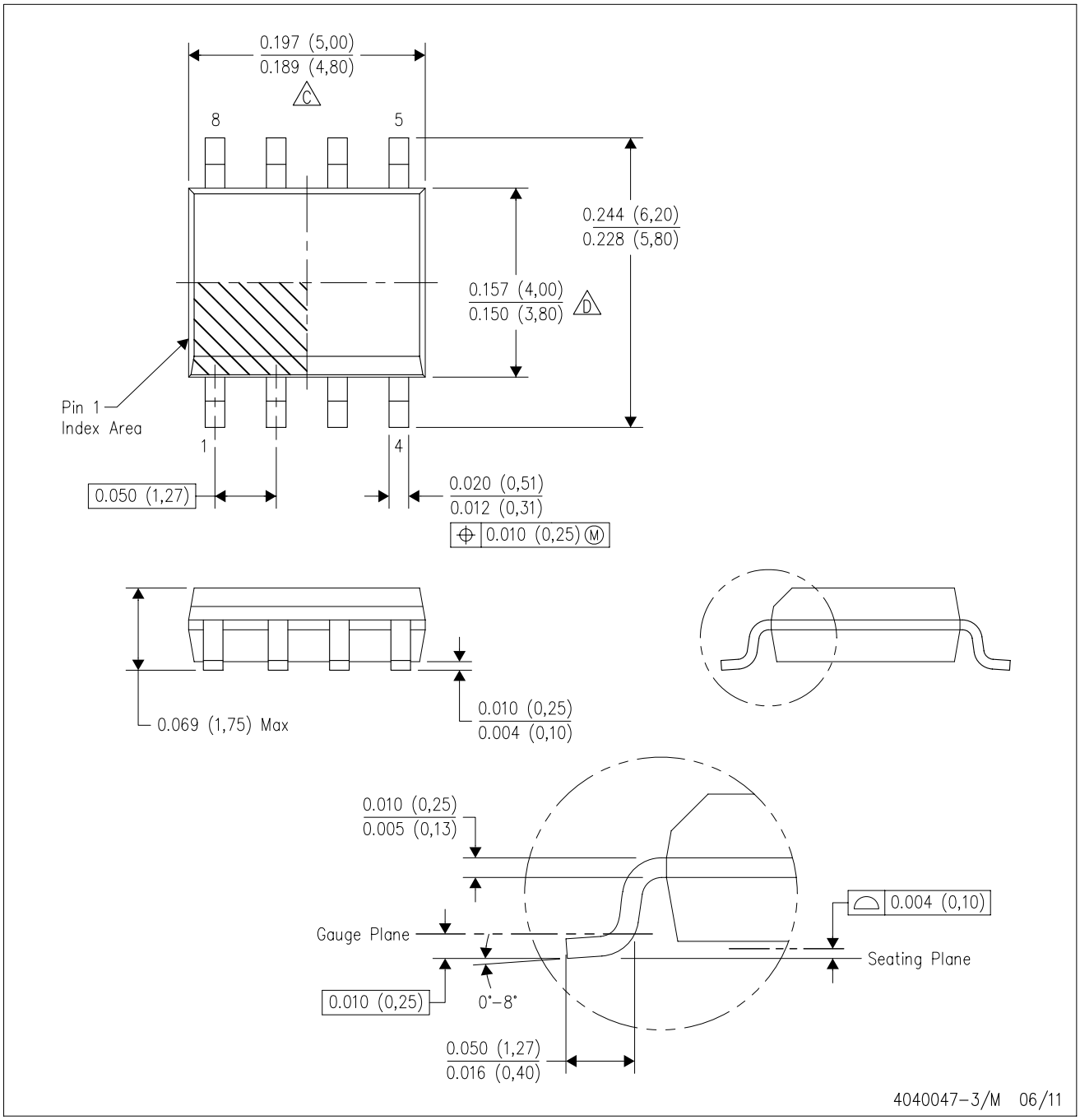

NOTES:
A. All linear dimensions are in inches (millimeters).
B. This drawing is subject to change without notice.
C. Body length does not include mold flash, protrusions, or gate burrs. Mold flash, protrusions, or gate burrs shall not exceed 0.006 (0,15) each side.
D. Body width does not include interlead flash. Interlead flash shall not exceed 0.017 (0,43) each side.
E. Reference JEDEC MS–012 variation AA.

IMPORTANT NOTICE

Texas Instruments Incorporated and its subsidiaries (TI) reserve the right to make corrections, enhancements, improvements and other changes to its semiconductor products and services per JESD46, latest issue, and to discontinue any product or service per JESD48, latest issue. Buyers should obtain the latest relevant information before placing orders and should verify that such information is current and complete. All semiconductor products (also referred to herein as “components”) are sold subject to TI’s terms and conditions of sale supplied at the time of order acknowledgment.

TI warrants performance of its components to the specifications applicable at the time of sale, in accordance with the warranty in TI’s terms and conditions of sale of semiconductor products. Testing and other quality control techniques are used to the extent TI deems necessary to support this warranty. Except where mandated by applicable law, testing of all parameters of each component is not necessarily performed.

TI assumes no liability for applications assistance or the design of Buyers’ products. Buyers are responsible for their products and applications using TI components. To minimize the risks associated with Buyers’ products and applications, Buyers should provide adequate design and operating safeguards.

TI does not warrant or represent that any license, either express or implied, is granted under any patent right, copyright, mask work right, or other intellectual property right relating to any combination, machine, or process in which TI components or services are used. Information published by TI regarding third-party products or services does not constitute a license to use such products or services or a warranty or endorsement thereof. Use of such information may require a license from a third party under the patents or other intellectual property of the third party, or a license from TI under the patents or other intellectual property of TI.

Reproduction of significant portions of TI information in TI data books or data sheets is permissible only if reproduction is without alteration and is accompanied by all associated warranties, conditions, limitations, and notices. TI is not responsible or liable for such altered documentation. Information of third parties may be subject to additional restrictions.

Resale of TI components or services with statements different from or beyond the parameters stated by TI for that component or service voids all express and any implied warranties for the associated TI component or service and is an unfair and deceptive business practice. TI is not responsible or liable for any such statements.

Buyer acknowledges and agrees that it is solely responsible for compliance with all legal, regulatory and safety-related requirements concerning its products, and any use of TI components in its applications, notwithstanding any applications-related information or support that may be provided by TI. Buyer represents and agrees that it has all the necessary expertise to create and implement safeguards which anticipate dangerous consequences of failures, monitor failures and their consequences, lessen the likelihood of failures that might cause harm and take appropriate remedial actions. Buyer will fully indemnify TI and its representatives against any damages arising out of the use of any TI components in safety-critical applications.

In some cases, TI components may be promoted specifically to facilitate safety-related applications. With such components, TI’s goal is to help enable customers to design and create their own end-product solutions that meet applicable functional safety standards and requirements. Nonetheless, such components are subject to these terms.

No TI components are authorized for use in FDA Class III (or similar life-critical medical equipment) unless authorized officers of the parties have executed a special agreement specifically governing such use.

Only those TI components which TI has specifically designated as military grade or “enhanced plastic” are designed and intended for use in military/aerospace applications or environments. Buyer acknowledges and agrees that any military or aerospace use of TI components which have ***not*** been so designated is solely at the Buyer's risk, and that Buyer is solely responsible for compliance with all legal and regulatory requirements in connection with such use.

TI has specifically designated certain components as meeting ISO/TS16949 requirements, mainly for automotive use. In any case of use of non-designated products, TI will not be responsible for any failure to meet ISO/TS16949.

Products		**Applications**	
Audio	www.ti.com/audio	Automotive and Transportation	www.ti.com/automotive
Amplifiers	amplifier.ti.com	Communications and Telecom	www.ti.com/communications
Data Converters	dataconverter.ti.com	Computers and Peripherals	www.ti.com/computers
DLP® Products	www.dlp.com	Consumer Electronics	www.ti.com/consumer-apps
DSP	dsp.ti.com	Energy and Lighting	www.ti.com/energy
Clocks and Timers	www.ti.com/clocks	Industrial	www.ti.com/industrial
Interface	interface.ti.com	Medical	www.ti.com/medical
Logic	logic.ti.com	Security	www.ti.com/security
Power Mgmt	power.ti.com	Space, Avionics and Defense	www.ti.com/space-avionics-defense
Microcontrollers	microcontroller.ti.com	Video and Imaging	www.ti.com/video
RFID	www.ti-rfid.com		
OMAP Applications Processors	www.ti.com/omap	**TI E2E Community**	e2e.ti.com
Wireless Connectivity	www.ti.com/wirelessconnectivity		

Mailing Address: Texas Instruments, Post Office Box 655303, Dallas, Texas 75265
Copyright © 2014, Texas Instruments Incorporated